DOCKWEILER
connecting flow to purity

MICROELECTRONICS

TUBES, PIPES, FITTINGS AND CONNECTIONS

FOR SEMICONDUCTOR
AND HIGH-TECH INDUSTRIES

- **ultron** / **ultron** vim**var**
- **ultron** ltp
- **TCC** / **TCC** ltp

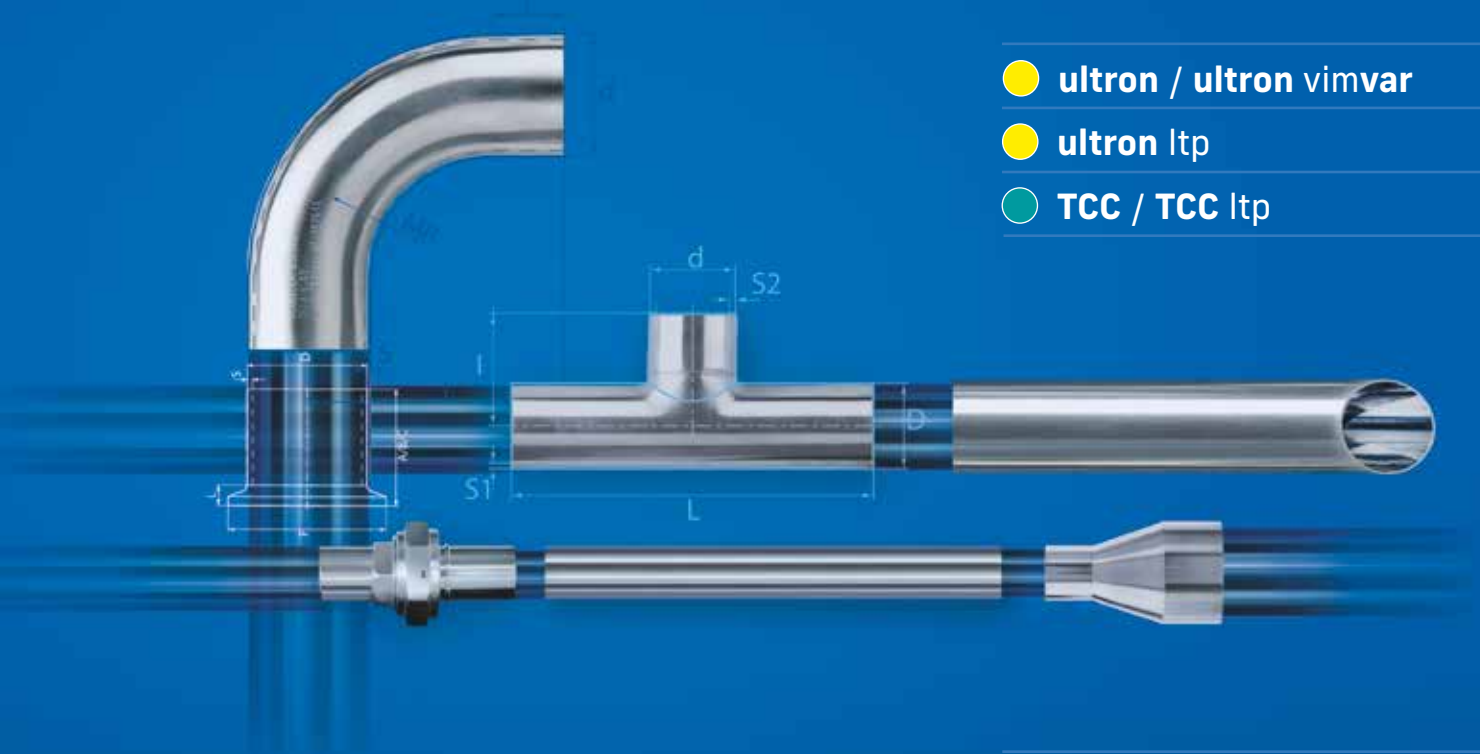

ASIA PACIFIC REGION

DOCKWEILER
YOUR PARTNER AND EXPERT FOR HIGH PURITY SOLUTIONS

Specific inner surfaces
for safe installations.

Highest purity down to Ra 5 µin.

Dockweiler quality
from raw material to delivery.

All certificates are available on:
www.dockweiler.com

Consistent 3.1 certificates
with all important information.

End-to-end documentation
and traceability.

Engineerd components
for enhanced efficiency.

Weld seams in perfection and
ultimate quality.

Disclaimer for contents: The contents of the catalog have been prepared with the greatest care. However, Dockweiler AG does not assume any liability for the correctness, completeness, reliability, usability and validity of the contents. The same applies to other Dockweiler companies that use this term. The respective customer is therefore obliged to check all contents in advance for their suitability for the intended use or to have them checked by a qualified professional.

CONTENTS **PAGE**

Specifications	**4**
How-to-order	**12**
Tubes, Pipes, Fittings and Connections	**14**
Tubes	16
Elbow 45°	18
Elbow 90°	20
Tee Equal / Reducing	22
Concentric Reducer	28
Weld Cap	32
Removable Weld Cap (Dockweiler Cap)	34
ZeroCon Connection	36
COAX Double Wall Tube System	**40**
Coaxial Tubing	42
Coaxial Tee / Coaxial Reducing Tee	44
Coaxial 45° Elbow	46
Coaxial 90° Elbow	47
Coaxial Weld Sleeve	48
Coaxial Terminator	49
Coaxial Purge Tee	50
Coaxial Bulkhead Purge Tee	51
Customized Solutions	**52**
Process Vessels / Bubbler	54
Prefabricated Laterals / Manifolds	56
Dockweiler Contact	**60**

SPECIFICATIONS
ULTRON, ULTRON VIM-VAR

For UHP gas applications in semiconductor industry and fine chemistry

● ultron / ultron vimvar

ep **electropolished**
cleanroom cleaning and packing

1. SURFACES QUALITIES

Tubes and fittings:	Inner surface (ep)	Outer surface
● **ultron**	Ra $_{avg.}$ ≤ 10 µin (0.25 µm)	Ra $_{avg.}$ ≤ 40 µin (1.0 µm)
● **ultron VIM-VAR**	Ra $_{avg.}$ ≤ 7 µin (0.18 µm)	Ra $_{avg.}$ ≤ 40 µin (1.0 µm)
On request:	Ra $_{avg.}$ ≤ 5 µin (0.13 µm) Ra $_{avg.}$ ≤ 7 µin (0.18 µm) Ra $_{avg.}$ ≤ 15 µin (0.38 µm)	

Pipes and pipe fittings:	Inner surface (ep)	Outer surface
● **ultron**	Ra $_{avg.}$ ≤ 20 µin (0.51 µm)	RA not defined

Additional notes:
- The Ra value in the cold worked area of fittings (inner and outer surface) and on the surface of circumferential welds is not defined. For dimmensions OD ≤ 1/4" (6.35 mm) roughness is not defined.
- Free of oil and grease acc. to CGA G-4.1-2018 and ASTM G93 – level A.
- Cleanroom cleaning and packing (Federal Class 10 / ISO Class 4)

2. MATERIALS

● **ultron**	1.4404 / UNS S31603 (316L), 1.4435 / UNS S31603 (316L), UNS S31603 (316L)
● **ultron Alloy 22**	N06022 according to ASTM B622 / B575 / B574 / B829 (1/4" to 1" seamless tubes)
● **ultron VIM-VAR**	UNS S31603 (316L) VIM-VAR double melted stainless steel

Hardness equivalent to:
- max. 180 HV* according to DIN EN ISO 6507-1
- max. 90 HRB* according to DIN EN ISO 6508-1

* comparable to ASTM E-384 (HV) and ASTM E 18-22 (HRB)

3. DIMMENSIONS

Tubes and fittings:	Imperial according to ASTM A269 / A270 / A632	
OD[1] x WT:	1/8" x 0.022" to 6" x 0.109"	219.08 x 3.76 mm to 323.9 mm x 4.57 mm
	[1] VIM-VAR only available up to 1"	
Manufacturing process:	Seamless Tubes ≤ 1" OD (25.40 mm)	Welded Tubes ≥ 1 1/2" OD (38.10 mm)

Pipes:	according to ASTM A312	
Dimensions:	NPS 8, 10, 12 Schedule 10S	Length: min. 19.36 ft to max. 19.98 ft
Manufacturing process:	Welded Tubes	

4. QUALITY AND TEST PROCEDURES

- Verification of basic test certificate
- Visual inspection
- Endoscopic inspection of bright finished tubes
- Verification of dimmensions
- Roughness measurements
- Conductivity test (DI water)
- TOC-measurement of DI water
- Particle measurements
- Scanning electron microscope (SEM)
- XPS / ESCA
- Auger analysis (AES)

5. TECHNICAL TERMS OF DELIVERY

Tubes and fittings are prepared for orbital welding. Different end preparations may be agrred on.

Tubes and Pipes

According to ASTM A 632 / A 269 / A 270 / A 312 (Pipes), DIN EN 10217-7/ 10216-5 with a length of 19.35 ft - 19.98 ft (5900 - 6090 mm), max. 10% short lengths of min. 9.84 ft (3000 mm). Tubes with an outside diameter of 5.00 mm or smaller are supplied with a length of 2950 mm (+/-50 mm).

Tube fitting components

Manufacturing and tolerances according to DIN11865, ASTM A 403 (Pipes) and ASME B16.9 (Pipes).

Machined components

Prematerial acc. to ASTM A 479, DIN EN 10088-3, DIN 17440, ASTM A 182 (Pipes)

Marking always with

DOCKWEILER / DW-Number / Dimension / Material / Heat number

Tubes, pipes and fittings are permanently marked. The marking provides all necessary information to trace back the heat number and the material grade.

6. DOCUMENTATION, PACKAGING AND SHIPPING

The documentation result by the Dockweiler Inspection Certificate 3.1 according to DIN EN 10204.

Tubes and fittings filled with N2 (99.999%), closed with PA/PE squares and yellow PE caps, double-bagged and sealed in PE-sleeves.

Delivery in tubular container or wooden crate, fittings in strong cardboard box with shock absorbing filler.

The batch label on the foil contains the information ultron or ultron vimvar.

SPECIFICATIONS
ULTRON LTP

For UHP applications
in particular for Asia-Pacific and US markets

ultron ltp

ep **electropolished**
cleanroom cleaning and packing

1. SURFACES QUALITIES

Tubes and fittings:	Inner surface (ep)	Outer surface
ultron ltp A Size ≤ 150 A	Ra $_{avg.}$ ≤ 10 µin (0.25 µm)	Ra $_{avg.}$ ≤ 40 µin (1.0 µm)
ultron ltp A Size > 150 A	Ra $_{Max}$ ≤ 20 µin (0.51 µm)	Ra $_{avg.}$ ≤ 40 µin (1.0 µm)
On request:	Ra $_{avg.}$ ≤ 5 µin (0.13 µm) Ra $_{avg.}$ ≤ 7 µin (0.18 µm)	

Pipes:	Inner surface (ep)	Outer surface
ultron ltp	Ra $_{Max}$ ≤ 20 µin (0.51 µm)	Ra $_{avg.}$ ≤ 40 µin (1.0 µm)

Additional notes:	- The Ra value in the cold worked area of fittings (inner and outer surface) and on the surface of circumferential welds is not defined. For dimmensions OD ≤ 5,00 mm roughness is not measured. - Free of oil and grease acc. to CGA G-4.1-2018 and ASTM G93 – level A. - Cleanroom cleaning and packing (Federal Class 10 / ISO Class 4)

2. MATERIALS

ultron ltp	SUS 316LTP acc. to JIS G3459, SEMI F 20 and ASTM A 269 / A 632 for OD tubing and A-Size
Hardness equivalent to:	- max. 180 HV* according to DIN EN ISO 6507-1 - max. 90 HRB* according to DIN EN ISO 6508-1 * comparable to ASTM E-384 (HV) and ASTM E 18-22 (HRB)

3. DIMMENSIONS

Tubes and fittings:	Imperial according to ASTM A269 / A270 / A632	
OD x WT:	1/8" x 0.022" to 6" x 0.109"	3.18 mm x 0.56 mm to 152.4 mm x 2.77 mm
Tubes and fittings:	**A-Size according to JIS G 3459**	
	Schedule Number 5S 6A – 300A (10.50 x 1.00mm – 318.00 x 4.00mm) Schedule Number 10S 6A – 300A (10.50 x 1.20mm – 318.00 x 4.50mm)	
Manufacturing process:	Seamless Tubes ≤ 1" OD (25.40 mm) Seamless Tubes ≤ 15A OD (21.70 mm)	Welded tubes ≥ 1 1/2" OD (38.10 mm) Welded tubes ≥ 20A OD (27.20 mm)

Pipes:	Straight pipes as per ASTM A312 Schedule 10S	
Dimmensions:	NPS 8 to NPS 24 Schedule 10S	219.08 x 3.76 mm to 609.60 mm x 6.35 mm
Manufacturing process:	Welded Tubes	

4. QUALITY AND TEST PROCEDURES

- Verification of basic test certificate
- Visual inspection
- Endoscopic inspection of bright finished tubes
- Verification of dimmensions
- Roughness measurements
- Conductivity test (DI water)
- TOC-measurement of DI water
- Particle measurements
- Scanning electron microscope (SEM)
- XPS / ESCA
- Auger analysis (AES)

5. TECHNICAL TERMS OF DELIVERY

Tubes and fittings are prepared for orbital welding. Different end preparations may be agrred on.

Tubes and Pipes

According to ASTM A 632/ A 269 / A 270 / A 312 (Pipes), DIN EN 10217-7/ 10216-5 with a length of 19.35 ft - 19.98 ft (5900 - 6090 mm), max. 10% short lengths of min. 9.84 ft (3000 mm). Tubes with an outside diameter of 5.00 mm or smaller are supplied with a length of 2950 mm (+/-50 mm).

Tube fitting components

Manufacturing and tolerances according to DIN11865, JIS G 3459, ASTM A 403 (Pipes) and ASME B16.9 (Pipes).

Machined components

Prematerial according to JIS G 4303 and ASTM A 479

Marking always with

DOCKWEILER / DW-Number / Dimension / Material / Heat number

Tubes, pipes and fittings are permanently marked. The marking provides all necessary information to trace back the heat number and the material grade.

6. DOCUMENTATION, PACKAGING AND SHIPPING

The documentation result by the Dockweiler Inspection Certificate 3.1 according to DIN EN 10204.

Tubes and fittings filled with N2 (99.999%), closed with PA/PE squares and yellow PE caps, double-bagged and sealed in PE-sleeves.

Delivery in tubular container or wooden crate, fittings in strong cardboard box with shock absorbing filler.

The batch label on the foil contains the information ultron ltp.

SPECIFICATIONS
TCC

Widely used in production, process measurement and photovoltaic

TCC

bf **bright finished**

1. SURFACES QUALITIES

Tubes and fittings:	Inner surface	Outer surface
● **TCC**	Ra $_{avg.}$ ≤ 30 µin (0,80 µm)	Ra $_{avg.}$ ≤ 40 µin (1.0 µm)

Pipes and pipe fittings:	Inner surface	Outer surface
● **TCC**	Ra $_{avg.}$ ≤ 30 µin (0,80 µm)	Ra $_{avg.}$ ≤ 40 µin (1.0 µm)

Additional notes:
- The Ra value in the cold worked area of fittings (inner and outer surface) and on the surface of circumferential welds is not defined. For dimmensions OD ≤ 3/8" (5.00 mm) roughness is not measured.
- TCC (bf): Cleaning and test procedure ASTM A 632, S3 and ASTM G93 – level D.

2. MATERIALS

● **TCC**	1.4435 / UNS S31603 (316L), 1.4404 / UNS S31603 (316L), UNS S31603 (316L) UNS S30403 (304L)
● **TCC Alloy 22**	N06022 according to ASTM B622 / B575 / B574 / B829 (1/4" to 1" seamless tubes)

Hardness equivalent to:
- max. 180 HV* according to DIN EN ISO 6507-1
- max. 90 HRB* according to DIN EN ISO 6508-1

* comparable to ASTM E-384 (HV) and ASTM E 18-22 (HRB)

3. DIMMENSIONS

Tubes and fittings:	Imperial according to ASTM A269 / A270 / A632	
OD x WT:	1/8" x 0.022" to 6" x 0.109"	3.18 mm x 0.56 mm to 152.4 mm x 2.77 mm
Manufacturing process:	Seamless Tubes ≤ 1" OD (25.40 mm)	Welded tubes ≥ 1 1/2" OD (38.10 mm)

Pipes:	according to ASTM A312	
Dimmensions:	NPS 8, 10, 12 Schedule 10S	219.08 x 3.76 mm to 323.9 mm x 4.57 mm
Manufacturing process:	Welded Tubes	

4. QUALITY AND TEST PROCEDURES

- Verification of basic test certificate
- Visual inspection
- Endoscopic inspection of bright finished tubes
- Verification of dimmensions
- Roughness measurements

5. TECHNICAL TERMS OF DELIVERY

Tubes and fittings are prepared for orbital welding. Different end preparations may be agrred on.

Tubes and Pipes

acc. to ASTM A 269 / A 270 / A 632 / A 312 (Pipes), DIN EN 10217-7/ 10216-5 with a length of 19.35 ft - 19.98 ft (5900 - 6090 mm), max. 10% short lengths of min. 9.84 ft (3000 mm)

Tube fitting components

Manufacturing and tolerances according to DIN11865, ASTM A 403 (Pipes) and ASME B16.9 (Pipes).

Machined components

Prematerial acc. to ASTM A 479, DIN EN 10088-3, DIN 17440, ASTM A 182 (Pipes)

Marking always with

DOCKWEILER / DW-Number / Dimmension / Material / Heat number

Tubes, pipes and fittings are permanently marked. The marking provides all necessary information to trace back the heat number and the material grade.

6. DOCUMENTATION, PACKAGING AND SHIPPING

Documentation

The documentation result by the Dockweiler Inspection Certificate 3.1 according to DIN EN 10204.
Optional online documentation WebCert.

Packaging

Bright finished tubes and fittings are sealed with white/ transparent PE caps and packaged in PE foil.
The batch label contains the information TCC.

Shipping

Delivery in tubular container or wooden crate, fittings in strong cardboard box with shock absorbing filler.

SPECIFICATIONS
TCC LTP

Widely used in production, process measurement and photovoltaic **in particular for Asia-Pacific and US markets**

TCC ltp

bf **bright finished**

1. SURFACES QUALITIES

Tubes and fittings:	Inner surface	Outer surface
● **TCC** ltp	Ra $_{avg.}$ ≤ 20 µin (0,50 µm)	Ra $_{avg.}$ ≤ 40 µin (1.0 µm)

Pipe and pipe fittings:	Inner surface	Outer surface
● **TCC** ltp	Ra $_{avg.}$ ≤ 32 µin (0,80 µm)	Ra $_{avg.}$ ≤ 40 µin (1.0 µm)

Additional notes:
- The Ra value in the cold worked area of fittings (inner and outer surface) and on the surface of circumferential welds is not defined. For dimmensions OD ≤ 3/8" (5.00 mm) roughness is not measured.
- TCC (bf): Cleaning and test procedure ASTM A 632, S3 and ASTM G93 – level D.

2. MATERIALS

● **TCC** ltp	SUS 316LTP acc. to JIS G3459, SEMI F 20 and ASTM A 269 / A 632 for OD tubing and A-Size
Hardness equivalent to:	- max. 180 HV* according to DIN EN ISO 6507-1 - max. 90 HRB* according to DIN EN ISO 6508-1 * comparable to ASTM E-384 (HV) and ASTM E 18-22 (HRB)

3. DIMMENSIONS

Tubes and fittings:	Imperial according to ASTM A269 / A270 / A632	
OD x WT:	1/8" x 0.022" to 6" x 0.109"	3.18 mm x 0.56 mm to 152.4 mm x 2.77 mm
Tubes and fittings:	**A-Size according to JIS G 3459**	
	Schedule Number 5S 6A – 300A (10.50 x 1.00mm – 318.00 x 4.00mm) Schedule Number 10S 6A – 300A (10.50 x 1.20mm – 318.00 x 4.50mm)	
Manufacturing process:	Seamless Tubes ≤ 1" OD (25.40 mm) Seamless Tubes ≤ 15A OD (21.70 mm)	Welded tubes ≥ 1 1/2" OD (38.10 mm) Welded tubes ≥ 20A OD (27.20 mm)

Pipes:	Straight pipes as per ASTM A312 Schedule 10S	
Dimmensions:	NPS 8 to NPS 24 Schedule 10S	219.08 x 3.76 mm to 609.60 mm x 6.35 mm
Manufacturing process:	Welded Tubes	

4. QUALITY AND TEST PROCEDURES

- Verification of basic test certificate
- Visual inspection
- Endoscopic inspection of bright finished tubes
- Verification of dimmensions
- Roughness measurements

5. TECHNICAL TERMS OF DELIVERY

Tubes and fittings are prepared for orbital welding. Different end preparations may be agrred on.

Tubes

acc. to ASTM A 269 / A 270 / A 632 / A 312 (Pipes), DIN EN 10217-7/ 10216-5 / JIS G 3459 with a length of 19.35 ft - 19.98 ft (5900 - 6090 mm), max. 10% short lengths of min. 9.84 ft (3000 mm)

Tube fitting components

Manufacturing and tolerances according to DIN11865, JIS G 3459, ASTM A 403 (Pipes) and ASME B16.9 (Pipes).

Machined components

Prematerial according to JIS G 4303 and ASTM A 479

Marking always with

DOCKWEILER / DW-Number / Dimmension / Material / Heat number

Tubes, pipes and fittings are permanently marked. The marking provides all necessary information to trace back the heat number and the material grade.

6. DOCUMENTATION, PACKAGING AND SHIPPING

Documentation

The documentation result by the Dockweiler Inspection Certificate 3.1 according to DIN EN 10204.
Optional online documentation WebCert.

Packaging

Bright finished tubes and fittings are sealed with white/ transparent PE caps and packaged in PE foil.
The batch label contains the information TCC ltp.

Shipping

Delivery in tubular container or wooden crate, fittings in strong cardboard box with shock absorbing filler.

HOW-TO-ORDER
DOCKWEILER TUBES AND FITTINGS

Dockweiler Order Code System: Easy to select and combine

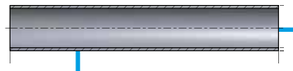

Order Code Selection for Tubes:

Sample: ultron Tube 1 Inch
Combine: A – C
Order Code: U – 16

Sample: ultron vim-var Tube 1 Inch
Combine: A – C - add-on
Order Code: U – 16 – V

A. DOCKWEILER QUALITY

Code Quality	Specification	Material
U	● ultron	316L (ep)
T	● TCC	316L/304L (bf)

B. BASIC CODE TYPE OF PRODUCT

Code Product	Description
CT	Coil Tube
E4	45° Elbow
E9	90° Elbow
TE	Tee Equal
RT	Reducing Tee
RC	Concentric Reducer
DC	Dockweiler Cap
WC	Weld Cap
Z	ZeroCon Connection
WFT	CleanShut Wall Feedthrough
CO	Coaxial Tube
CTE	Coaxial Tee Equal
CTR	Coaxial Reducing Tee
CE4	Coaxial 45° Elbow
CE9	Coaxial 90° Elbow
CS	Coaxial Sleeve
CTM	Coaxial Terminator
CPT	Coaxial Purge Tee
CBP	Coaxial Bulkhead Purge Tee
CFG	Coaxial VCR Female Gland
CMG	Coaxial VCR Male Gland

C. BASIC CODE OUTER DIAMETER

Code Diameter	Size (Inch)	Wall Thickness
02	1/8	0.022
04	1/4	0.035
06	3/8	0.035
08	1/2	0.049
10	5/8	0.049
12	3/4	0.065
16	1	0.065
24	1 1/2	0.065
32	2	0.065
40	2 1/2	0.065
48	3	0.065
64	4	0.083
96	6	0.109
	Pipe Schedule 10S	
96NPS	6	0.130
128NPS	8	0.148
160NPS	10	0.165
192NPS	12	0.180
224NPS	14	0.189
256NPS	16	0.189
288NPS	18	0.189
320NPS	20	0.218

D. ADD-ON

Code add-on	
LTP	ltp add-on ● TCC and ● ultron
V	vim-var add-on ● ultron
22	Alloy 22 add-on ● ultron

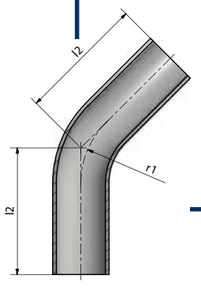

Order Code Selection for Fittings:

Sample: finetron Elbow 45° 1/2 Inch
Combine: A – B – C
Order Code: F – E4 – 08

Sample: ultron vim-var Elbow 45° 1/2 Inch
Combine: A – B – C – D
Order Code: U – E4 – 08 – V

Dockweiler Tube Systems: Tubes and Orbital Weld Fittings

For the highest requirements for surfaces, purity and corrosion resistance. Our tubes and fittings meet the highest demands for applications in microelectronics or in other high-tech industries.

Tubes and Pipes

Page 16

45° Elbow

Page 18

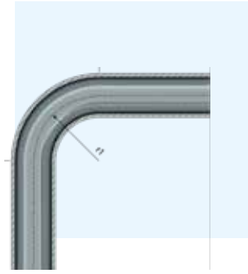

90° Elbow

Page 20

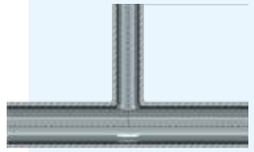

T-Pieces Equal and Reduced

Page 22

Concentric Reducer

Page 28

Weld Cap

Page 32

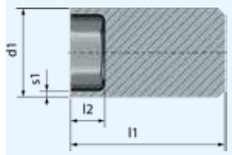

Dockweiler Cap

Page 34

ZeroCon Connection

Page 36

TUBES AND PIPES
IMPERIAL/NPS

Imperial

Nominal Size d		Wall Thickness s	Weight	ultron	TCC		Product Code[B] + Diameter[C]		ltp add-on	ltp add-on	vim var add-on
Inch	mm	mm	kg/m		316 L				Options		
1/8	3,18	0,56	0,04	U	T	-	02	-	LTP	-	-
1/4	6,35	0,89	0,12	U	T	-	04	-	LTP	-	V*
3/8	9,53	0,89	0,20	U	T	-	06	-	LTP	-	V*
1/2	12,70	1,24	0,35	U	T	-	08	-	LTP	-	V*
3/4	19,05	1,65	0,72	U	T	-	12	-	LTP	-	V*
1	25,40	1,65	0,98	U	T	-	16	-	LTP	-	V*
1 1/2	38,10	1,65	1,51	U	T	-	24	-	LTP		
2	50,80	1,65	2,03	U	T	-	32	-	LTP		
2 1/2	63,50	1,65	2,56	U	T	-	40	-	LTP		
3	76,20	1,65	3,08	U	T	-	48	-	LTP		
4	101,60	2,11	5,26	U	T	-	64		LTP		
6	152,40	2,77	10,39	U	T	-	96	-	LTP		

*VimVar only available for ultron.

For Order Code please combine:
Quality[A] - Product Code[B] + Diameter[C] (+ add-on for VimVar)

Alloy 22 – FOR HIGHLY-CORROSIVE MEDIA

Nominal Size d		Wall Thickness s	Weight	ultron		Product Code[B] + Diameter[C]		Alloy 22 add-on
Inch	mm	mm	kg/m					
1/4	6,35	0,89	0,122	U	-	04	-	22
3/8	9,53	0,89	0,193	U	-	06	-	22
1/2	12,70	1,24	0,357	U	-	08	-	22
3/4	19,05	1,65	0,722	U	-	12	-	22
1	25,40	1,65	0,985	U	-	16	-	22

Further dimesions on request.

For Order Code please combine:
Quality[A] - Product Code[B] + Diameter[C] + add-on for **Alloy 22**

TUBES
A-SIZE

PIPE NPS Schedule 10S

Dimmensions	d x s			Weight	ultron	TCC		Product Code[B] + Diameter[C]
NPS	mm			kg/m	316 L			
6*	168,28	x	3,40	14,04	U	T	-	96NPS
8	219,08	x	3,76	20,27	U	T	-	128NPS
10	273,05	x	4,19	28,21	U	T	-	160NPS
12	323,85	x	4,57	36,54	U	T	-	192NPS
16	406,40	x	4,78	48,07		T	-	256NPS
20	508,00	x	5,54	69,95		T	-	320NPS

* optional / on demand

Further dimesions on request.

For Order Code please combine:
Product Quality - Basic Code

JIS G 3459

	d	s	Weight	ultron	TCC		Product Code[B] + Diameter[C]
SCH	mm	mm	kg/m	SUS 316 LTP			
5S	21,70	1,65	0,83	U	T	-	15A
5S	27,20	1,65	1,06	U	T	-	20A
5S	34,00	1,65	1,34	U	T	-	25A
5S	42,70	1,65	1,70	U	T	-	32A
5S	48,60	1,65	1,94	U	T	-	40A
5S	60,50	1,65	2,43	U	T	-	50A
5S	76,30	2,10	3,91	U	T	-	65A
5S	89,10	2,10	4,58	U	T	-	80A
5S	101,60	2,10	5,24	U	T	-	90A
5S	114,30	2,10	5,91	U	T	-	100A
5S	139,80	2,80	9,62	U	T	-	125A
5S	165,20	2,80	11,40	U	T	-	150A
10S	216,30	4,00	21,30	U	T	-	200A
10S	267,40	4,00	26,40	U	T	-	250A
10S	318,50	4,50	35,40	U	T	-	300A

Further dimesions on request.

For Order Code please combine:
Quality[A] - Product Code[B] + Diameter[C]

ELBOWS 45°
IMPERIAL

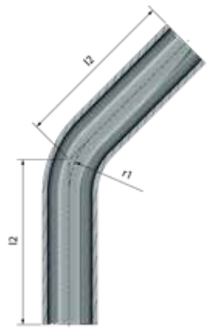

Nominal Size d1		Wall Thickness s1	Length l2	Radius r1	ultron	TCC		Product Code[B] + Diameter[C]		ltp add-on / ltp add-on
Inch	mm		mm		316 L					Options
1/4	6,35	0,89	50,80	14,30	U	T	-	E4-04	-	LTP
3/8	9,53	0,89	50,80	28,60	U	T	-	E4-06	-	LTP
1/2	12,70	1,24	57,20	27,00	U	T	-	E4-08	-	LTP
3/4	19,05	1,65	57,20	28,60	U	T	-	E4-12	-	LTP
1	25,40	1,65	57,20	38,10	U	T	-	E4-16	-	LTP
1 1/2	38,10	1,65	63,50	57,20	U	T	-	E4-24	-	LTP
2	50,80	1,65	76,20	76,20	U	T	-	E4-32	-	LTP
2 1/2	63,50	1,65	85,70	95,30	U	T	-	E4-40	-	LTP
3	76,20	1,65	92,10	114,30	U	T	-	E4-48	-	LTP
4	101,60	2,11	114,30	152,40	U	T	-	E4-64	-	LTP
6	152,40	2,77	158,80	228,60	U	T	-	E4-96	-	LTP

Further dimesions on request.

For Order Code please combine:
Quality[A] - Product Code[B] + Diameter[C] (+ add-on for VimVar)

ELBOWS 45°
A-SIZE

A-Size	Nominal Size d1	Wall Thickness s1	Length l2	Radius r1	Schedule Sch	ultron	TCC		Product Code[B] + Diameter[C]
JIS G 3459	mm		mm			SUS 316 LTP			
15A	21,70	1,65	52,00	38,10	5S	U	T	-	E4-15A
20A	27,20	1,65	52,00	38,10	5S	U	T	-	E4-20A
25A	34,00	1,65	52,00	38,10	5S	U	T	-	E4-25A
32A	42,70	1,65	66,00	47,60	5S	U	T	-	E4-32A
40A	48,60	1,65	70,00	57,20	5S	U	T	-	E4-40A
50A	60,50	1,65	78,00	76,20	5S	U	T	-	E4-50A
65A	76,30	2,10	91,00	95,30	5S	U	T	-	E4-65A
80A	89,10	2,10	99,00	114,30	5S	U	T	-	E4-80A
100A	114,30	2,10	115,00	152,40	5S	U	T	-	E4-100A
125A	139,80	2,80	145,00	190,50	5S	U	T	-	E4-125A
150A	165,20	2,80	155,00	228,60	5S	U	T	-	E4-150A
200A	216,30	4,00	195,00	304,80	10S	U	T	-	E4-200A
250A	267,40	4,00	237,00	381,00	10S	U	T	-	E4-250A
300A	318,50	4,50	269,00	457,20	10S	U	T		E4-300A

Further dimesions on request.

For Order Code please combine:
Quality[A] - Product Code[B] + Diameter[C]

ELBOWS 90°
IMPERIAL

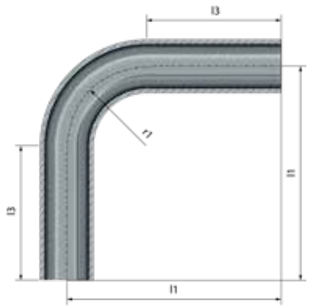

Nominal Size d1	Wall Thickness s1	Length l1	Length l3	Radius r1	ultron	TCC		Product Code[B] + Diameter[C]		ltp add-on	ltp add-on	vim var add-on
Inch	mm	mm			316 L					Options		
1/4	6,35	0,89	66,68	52,40	14,30	U	T	-	E9-04	-	LTP	V*
3/8	9,53	0,89	66,68	38,10	28,60	U	T	-	E9-06	-	LTP	V*
1/2	12,70	1,24	76,20	49,20	27,00	U	T	-	E9-08	-	LTP	V*
3/4	19,05	1,65	76,20	47,60	28,60	U	T	-	E9-12	-	LTP	V*
1	25,40	1,65	76,20	38,10	38,10	U	T	-	E9-16	-	LTP	V*
1 1/2	38,10	1,65	95,30	38,10	57,20	U	T	-	E9-24	-	LTP	
2	50,80	1,65	120,70	44,50	76,20	U	T	-	E9-32	-	LTP	
2 1/2	63,50	1,65	139,70	44,40	95,30	U	T	-	E9-40	-	LTP	
3	76,20	1,65	158,80	44,50	114,30	U	T	-	E9-48	-	LTP	
4	101,60	2,11	203,20	50,80	152,40	U	T	-	E9-64	-	LTP	
6	152,40	2,77	292,10	63,50	228,60	U	T	-	E9-96	-	LTP	

*VimVar only available for ultron.

Further dimesions on request.

For Order Code please combine:
Quality[A] - Product Code[B] + Diameter[C] (+ add-on for VimVar)

ELBOWS 90°
ALLOY 22 & A-SIZE

Alloy 22 – FOR HIGHLY-CORROSIVE MEDIA

Nominal Size d	Wall Thickness s1	Length l1	Length l3	Radius r1	ultron	finetron		Product Code[B] + Diameter[C]		Alloy 22 add-on
Inch		Inch								
1/4	0.035	2.626	2.063	0.563	U	F	-	04	-	22
3/8	0.035	2.626	1.500	1.126	U	F	-	06	-	22
1/2	0.049	3.000	1.937	1.063	U	F	-	08	-	22
3/4	0.065	3.000	1.874	1.126	U	F	-	12	-	22
1	0.065	3.000	1.500	1.500	U	F	-	16	-	22

Further dimmesions on request.

For Order Code please combine:
Quality[A] - Product Code[B] + Diameter[C] + 22 add-on

A-Size	Size d1	Wall Thickness s1	Length l1	Length l3	Radius r1	Schedule Sch	ultron	TCC		Product Code[B] + Diameter[C]
JIS G 3459	mm		mm				SUS 316 LTP			
15A	21,70	1,65	75,00	36,90	38,10	5S	U	T	-	E9-15A
20A	27,20	1,65	75,00	36,90	38,10	5S	U	T	-	E9-20A
25A	34,00	1,65	75,00	36,90	38,10	5S	U	T	-	E9-25A
32A	42,70	1,65	94,00	46,40	47,60	5S	U	T	-	E9-32A
40A	48,60	1,65	104,00	46,80	57,20	5S	U	T	-	E9-40A
50A	60,50	1,65	123,00	46,80	76,20	5S	U	T	-	E9-50A
65A	76,30	2,10	147,00	51,70	95,30	5S	U	T	-	E9-65A
80A	89,10	2,10	166,00	51,70	114,30	5S	U	T	-	E9-80A
100A	114,30	2,10	204,00	51,60	152,40	5S	U	T	-	E9-100A
125A	139,80	2,80	250,00	59,50	190,50	5S	U	T	-	E9-125A
150A	165,20	2,80	290,00	61,40	228,60	5S	U	T	-	E9-150A
200A	216,30	4,00	375,00	70,20	304,80	10S	U	T	-	E9-200A
250A	267,40	4,00	461,00	80,00	381,00	10S	U	T	-	E9-250A
300A	318,50	4,50	537,00	79,80	457,20	10S	U	T		E9-300A

Further dimesions on request.

For Order Code please combine:
Quality[A] - Product Code[B] + Diameter[C]

TEE *VimVar only available for ultron.

IMPERIAL

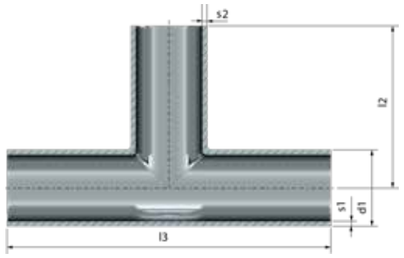

Imperial

d1 x d2		s1	s2	l3	l2	ultron	TCC		Product Code[B] + Diameter[C]		ltp add-on	ltp add-on	vim var add-on
		Wall Thickness		Length									
Inch	mm			mm		316L					Options		
1/4 x 1/4	6,35 x 6,35	0,89	0,89	89,00	44,50	U	T	-	TE-04	-	LTP		V*
3/8 x 1/4	9,53 x 6,35	0,89	0,89	89,00	44,50	U	T	-	TR-06-04	-	LTP		V*
3/8 x 3/8	9,53 x 9,53	0,89	0,89	89,00	44,50	U	T	-	TE-06	-	LTP		V*
1/2 x 1/4	12,70 x 6,35	1,24	0,89	95,20	47,60	U	T	-	TR-08-04	-	LTP		V*
1/2 x 3/8	12,70 x 9,53	1,24	0,89	95,20	47,60	U	T	-	TR-08-06	-	LTP		V*
1/2 x 1/2	12,70 x 12,70	1,24	1,24	95,20	47,60	U	T	-	TE-08	-	LTP		V*
3/4 x 1/4	19,05 x 6,35	1,65	0,89	108,00	50,80	U	T	-	TR-12-04	-	LTP		V*
3/4 x 3/8	19,05 x 9,53	1,65	0,89	108,00	50,80	U	T	-	TR-12-06	-	LTP		V*
3/4 x 1/2	19,05 x 12,70	1,65	1,24	108,00	50,80	U	T	-	TR-12-08	-	LTP		V*
3/4 x 3/4	19,05 x 19,05	1,65	1,65	108,00	50,80	U	T	-	TE-12	-	LTP		V*
1 x 1/4	25,40 x 6,35	1,65	0,89	108,00	54,00	U	T	-	TR-16-04	-	LTP		V*
1 x 3/8	25,40 x 9,53	1,65	0,89	108,00	54,00	U	T	-	TR-16-06	-	LTP		V*
1 x 1/2	25,40 x 12,70	1,65	1,24	108,00	54,00	U	T	-	TR-16-08	-	LTP		V*
1 x 3/4	25,40 x 19,05	1,65	1,65	108,00	54,00	U	T	-	TR-16-12	-	LTP		V*
1 x 1	25,40 x 25,40	1,65	1,65	108,00	54,00	U	T	-	TE-16	-	LTP		V*

For Order Code please combine:
Quality[A] - Product Code[B] + Diameter[C] (+ add-on for VimVar)

*VimVar only available for ultron.

Further dimesions on request.

Imperial

d1 x d2		s1	s2	l3	l2	ultron	TCC		Product Code[B] + Diameter[C]		ltp add-on	ltp add-on
		Wall Thickness		Length								
Inch				Inch		316L					Option	
1 1/2 x 1/2	38,10 x 12,70	1,65	1,24	120,60	60,30	U	T	-	TR-24-08	-	LTP	
1 1/2 x 3/4	38,10 x 19,05	1,65	1,65	120,60	60,30	U	T	-	TR-24-12	-	LTP	
1 1/2 x 1	38,10 x 25,40	1,65	1,65	120,60	60,30	U	T	-	TR-24-16	-	LTP	
1 1/2 x 1 1/2	38,10 x 38,10	1,65	1,65	120,60	60,30	U	T	-	TE-24	-	LTP	
2 x 1/2	50,80 x 12,70	1,65	1,24	146,00	66,70	U	T	-	TR-32-08	-	LTP	
2 x 3/4	50,80 x 19,05	1,65	1,65	146,00	66,70	U	T	-	TR-32-12	-	LTP	
2 x 1	50,80 x 25,40	1,65	1,65	146,00	66,70	U	T	-	TR-32-16	-	LTP	
2 x 1 1/2	50,80 x 38,10	1,65	1,65	146,00	66,70	U	T	-	TR-32-24	-	LTP	
2 x 2	50,80 x 50,80	1,65	1,65	146,00	73,00	U	T	-	TE-32	-	LTP	
2 1/2 x 1/2	63,50 x 12,70	1,65	1,24	158,80	73,00	U	T	-	TR-40-08	-	LTP	
2 1/2 x 3/4	63,50 x 19,05	1,65	1,65	158,80	73,00	U	T	-	TR-40-12	-	LTP	
2 1/2 x 1	63,50 x 25,40	1,65	1,65	158,80	73,00	U	T	-	TR-40-16	-	LTP	
2 1/2 x 1 1/2	63,50 x 38,10	1,65	1,65	158,80	73,00	U	T	-	TR-40-24	-	LTP	
2 1/2 x 2	63,50 x 50,80	1,65	1,65	158,80	73,00	U	T	-	TR-40-32	-	LTP	
2 1/2 x 2 1/2	63,50 x 63,50	1,65	1,65	158,80	79,40	U	T	-	TE-40	-	LTP	
3 x 1/2	76,20 x 12,70	1,65	1,24	171,50	79,40	U	T	-	TR-48-08	-	LTP	
3 x 3/4	76,20 x 19,05	1,65	1,65	171,50	79,40	U	T	-	TR-48-12	-	LTP	
3 x 1	76,20 x 25,40	1,65	1,65	171,50	79,40	U	T	-	TR-48-16	-	LTP	
3 x 1 1/2	76,20 x 38,10	1,65	1,65	171,50	79,40	U	T	-	TR-48-24	-	LTP	
3 x 2	76,20 x 50,80	1,65	1,65	171,50	79,40	U	T	-	TR-48-32	-	LTP	
3 x 2 1/2	76,20 x 63,50	1,65	1,65	171,50	79,40	U	T	-	TR-48-40	-	LTP	
3 x 3	76,20 x 76,20	1,65	1,65	171,40	85,70	U	T	-	TE-48	-	LTP	
4 x 1/2	101,60 x 12,70	2,11	1,24	209,60	92,10	U	T	-	TR-64-08	-	LTP	
4 x 3/4	101,60 x 19,05	2,11	1,65	209,60	92,10	U	T	-	TR-64-12	-	LTP	
4 x 1	101,60 x 25,40	2,11	1,65	209,60	92,10	U	T	-	TR-64-16	-	LTP	
4 x 1 1/2	101,60 x 38,10	2,11	1,65	209,60	92,10	U	T	-	TR-64-24	-	LTP	
4 x 2	101,60 x 50,80	2,11	1,65	209,60	98,40	U	T	-	TR-64-32	-	LTP	
4 x 2 1/2	101,60 x 63,50	2,11	1,65	209,60	98,40	U	T	-	TR-64-40	-	LTP	
4 x 3	101,60 x 76,20	2,11	1,65	209,60	98,40	U	T	-	TR-64-48	-	LTP	
4 x 4	101,60 x 101,60	2,11	2,11	209,60	104,80	U	T	-	TE-64	-	LTP	
6 x 3	152,40 x 76,20	2,77	1,65	285,80	130,20	U	T	-	TR-96-48	-	LTP	
6 x 4	152,40 x 101,60	2,77	2,11	285,80	130,20	U	T	-	TR-96-64	-	LTP	
6 x 6	152,40 x 152,40	2,77	2,77	285,80	142,90	U	T	-	TE-96	-	LTP	

For Order Code please combine:
Quality[A] - Product Code[B] + Diameter[C]

TEE EQUAL AND REDUCING
A-SIZE

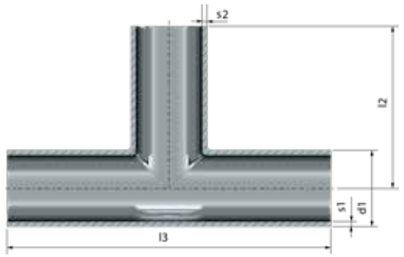

A-Size

JIS G 3459	d1 x d2	s1	Wall Thickness Schedule	s2	Schedule	Length l3	l2	ultron	TCC		Product Code[B] + Diameter[C]
	mm	mm		mm		mm	mm	SUS 316 LTP			
15A x 15A	21,70 x 21,70	1,65	5S	1,65	5S	118,00	59,00	U	T	-	TE-15A
20A x 15A	27,20 x 21,70	1,65	5S	1,65	5S	110,00	55,00	U	T	-	TR-20A-15A
20A x 20A	27,20 x 27,20	1,65	5S	1,65	5S	130,00	65,00	U	T	-	TE-20A
25A x 15A	34,00 x 21,70	1,65	5S	1,65	5S	118,00	59,00	U	T	-	TR-25A-15A
25A x 20A	34,00 x 27,20	1,65	5S	1,65	5S	118,00	59,00	U	T	-	TR-25A-20A
25A x 25A	34,00 x 34,00	1,65	5S	1,65	5S	136,00	68,00	U	T	-	TE-25A
32A x 15A	42,70 x 21,70	1,65	5S	1,65	5S	136,00	62,00	U	T	-	TR-32A-15A
32A x 20A	42,70 x 27,20	1,65	5S	1,65	5S	136,00	62,00	U	T	-	TR-32A-20A
32A x 25A	42,70 x 34,00	1,65	5S	1,65	5S	136,00	62,00	U	T	-	TR-32A-25A
32A x 32A	42,70 x 42,70	1,65	5S	1,65	5S	176,00	88,00	U	T	-	TE-32A
40A x 15A	48,60 x 21,70	1,65	5S	1,65	5S	136,00	65,00	U	T	-	TR-40A-15A
40A x 20A	48,60 x 27,20	1,65	5S	1,65	5S	136,00	65,00	U	T	-	TR-40A-20A
40A x 25A	48,60 x 34,00	1,65	5S	1,65	5S	136,00	65,00	U	T	-	TR-40A-25A
40A x 32A	48,60 x 42,70	1,65	5S	1,65	5S	154,00	77,00	U	T	-	TR-40A-32A
40A x 40A	48,60 x 48,60	1,65	5S	1,65	5S	190,00	95,00	U	T	-	TE-40A
50A x 15A	60,50 x 21,70	1,65	5S	1,65	5S	136,00	71,00	U	T	-	TR-50A-15A
50A x 20A	60,50 x 27,20	1,65	5S	1,65	5S	136,00	71,00	U	T	-	TR-50A-20A
50A x 25A	60,50 x 34,00	1,65	5S	1,65	5S	136,00	71,00	U	T	-	TR-50A-25A
50A x 32A	60,50 x 42,70	1,65	5S	1,65	5S	166,00	83,00	U	T	-	TR-50A-32A
50A x 40A	60,50 x 48,60	1,65	5S	1,65	5S	166,00	83,00	U	T	-	TR-50A-40A
50A x 50A	60,50 x 60,50	1,65	5S	1,65	5S	204,00	102,00	U	T	-	TE-50A

Further dimesions on request.

For Order Code please combine:
Quality[A] - Product Code[B] + Diameter[C]

A-Size

JIS G 3459	d1 x d2	s1	Wall Thickness Schedule	s2	Schedule	Length l3	l2	ultron	TCC		Product Code[B] + Diameter[C]
	mm	mm		mm		mm	mm	SUS 316 LTP			
65A x 15A	76,30 x 21,70	2,10	5S	1,65	5S	144,00	79,00	U	T	-	TR-65A-15A
65A x 20A	76,30 x 27,20	2,10	5S	1,65	5S	144,00	79,00	U	T	-	TR-65A-20A
65A x 25A	76,30 x 34,00	2,10	5S	1,65	5S	144,00	79,00	U	T	-	TR-65A-25A
65A x 32A	76,30 x 42,70	2,10	5S	1,65	5S	176,00	90,00	U	T	-	TR-65A-32A
65A x 40A	76,30 x 48,60	2,10	5S	1,65	5S	176,00	90,00	U	T	-	TR-65A-40A
65A x 50A	76,30 x 60,50	2,10	5S	1,65	5S	176,00	90,00	U	T	-	TR-65A-50A
65A x 65A	76,30 x 76,30	2,10	5S	2,10	5S	242,00	121,00	U	T	-	TE-65A
80A x 15A	89,10 x 21,70	2,10	5S	1,65	5S	144,00	85,00	U	T	-	TR-80A-15A
80A x 20A	89,10 x 27,20	2,10	5S	1,65	5S	144,00	85,00	U	T	-	TR-80A-20A
80A x 25A	89,10 x 34,00	2,10	5S	1,65	5S	144,00	85,00	U	T	-	TR-80A-25A
80A x 32A	89,10 x 42,70	2,10	5S	1,65	5S	144,00	85,00	U	T	-	TR-80A-32A
80A x 40A	89,10 x 48,60	2,10	5S	1,65	5S	176,00	96,00	U	T	-	TR-80A-40A
80A x 50A	89,10 x 60,50	2,10	5S	1,65	5S	176,00	96,00	U	T	-	TR-80A-50A
80A x 65A	89,10 x 76,30	2,10	5S	2,10	5S	176,00	96,00	U	T	-	TR-80A-65A
80A x 80A	89,10 x 89,10	2,10	5S	2,10	5S	206,00	103,00	U	T	-	TE-80A
80A x 100A	89,10 x 114,30	2,10	5S	2,10	5S	260,00	130,00	U	T	-	TR-80A-100A
100A x 15A	114,30 x 21,70	2,10	5S	1,65	5S	144,00	98,00	U	T	-	TR-100A-15A
100A x 20A	114,30 x 27,20	2,10	5S	1,65	5S	144,00	98,00	U	T	-	TR-100A-20A
100A x 25A	114,30 x 34,00	2,10	5S	1,65	5S	144,00	98,00	U	T	-	TR-100A-25A
100A x 32A	114,30 x 42,70	2,10	5S	1,65	5S	176,00	109,00	U	T	-	TR-100A-32A
100A x 40A	114,30 x 48,60	2,10	5S	1,65	5S	176,00	109,00	U	T	-	TR-100A-40A
100A x 50A	114,30 x 60,50	2,10	5S	1,65	5S	176,00	109,00	U	T	-	TR-100A-50A
100A x 65A	114,30 x 76,30	2,10	5S	2,10	5S	232,00	116,00	U	T	-	TR-100A-65A
100A x 80A	114,30 x 89,10	2,10	5S	2,10	5S	232,00	116,00	U	T	-	TR-100A-80A
100A x 100A	114,30 x 114,30	2,10	5S	2,10	5S	290,00	145,00	U	T	-	TE-100A
125A x 15A	139,80 x 21,70	2,80	5S	1,65	5S	200,00	120,00	U	T	-	TR-125A-15A
125A x 20A	139,80 x 27,20	2,80	5S	1,65	5S	200,00	120,00	U	T	-	TR-125A-20A
125A x 25A	139,80 x 34,00	2,80	5S	1,65	5S	200,00	120,00	U	T	-	TR-125A-25A
125A x 32A	139,80 x 42,70	2,80	5S	1,65	5S	240,00	130,00	U	T	-	TR-125A-32A
125A x 40A	139,80 x 48,60	2,80	5S	1,65	5S	240,00	130,00	U	T	-	TR-125A-40A
125A x 50A	139,80 x 60,50	2,80	5S	1,65	5S	240,00	130,00	U	T	-	TR-125A-50A
125A x 65A	139,80 x 76,30	2,80	5S	2,10	5S	280,00	140,00	U	T	-	TR-125A-65A
125A x 80A	139,80 x 89,10	2,80	5S	2,10	5S	280,00	140,00	U	T	-	TR-125A-80A
125A x 100A	139,80 x 114,30	2,80	5S	2,10	5S	280,00	140,00	U	T	-	TR-125A-100A
125A x 125A	139,80 x 139,80	2,80	5S	2,80	5S	320,00	160,00	U	T	-	TE-125A

Further dimesions on request.

For Order Code please combine:
Quality[A] - Product Code[B] + Diameter[C]

TEE EQUAL AND REDUCING
A-SIZE

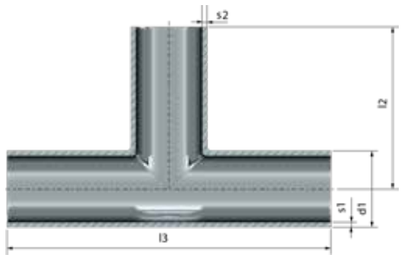

A-Size

JIS G 3459	d1 x d2	s1	Wall Thickness Schedule	s2	Schedule	Length l3	l2	ultron	TCC		Product Code[B] + Diameter[C]
	mm	mm		mm		mm	mm	SUS 316 LTP			
150A x 15A	165,20 x 21,70	2,80	5S	1,65	5S	220,00	140,00	U	T	-	TR-150A-15A
150A x 20A	165,20 x 27,20	2,80	5S	1,65	5S	220,00	140,00	U	T	-	TR-150A-20A
150A x 25A	165,20 x 34,00	2,80	5S	1,65	5S	220,00	140,00	U	T	-	TR-150A-25A
150A x 32A	165,20 x 42,70	2,80	5S	1,65	5S	260,00	150,00	U	T	-	TR-150A-32A
150A x 40A	165,20 x 48,60	2,80	5S	1,65	5S	260,00	150,00	U	T	-	TR-150A-40A
150A x 50A	165,20 x 60,50	2,80	5S	1,65	5S	260,00	150,00	U	T	-	TR-150A-50A
150A x 65A	165,20 x 76,30	2,80	5S	2,10	5S	300,00	160,00	U	T	-	TR-150A-65A
150A x 80A	165,20 x 89,10	2,80	5S	2,10	5S	300,00	160,00	U	T	-	TR-150A-80A
150A x 100A	165,20 x 114,30	2,80	5S	2,10	5S	300,00	160,00	U	T	-	TR-150A-100A
150A x 125A	165,20 x 139,80	2,80	5S	2,80	5S	340,00	170,00	U	T	-	TR-150A-125A
150A x 150A	165,20 x 165,20	2,80	5S	2,80	5S	340,00	170,00	U	T	-	TE-150A
200A x 15A	216,30 x 21,70	4,00	10S	1,65	5S	240,00	160,00	U	T	-	TR-200A-15A
200A x 25A	216,30 x 34,00	4,00	10S	1,65	5S	240,00	160,00	U	T	-	TR-200A-25A
200A x 32A	216,30 x 42,70	4,00	10S	1,65	5S	280,00	170,00	U	T	-	TR-200A-32A
200A x 40A	216,30 x 48,60	4,00	10S	1,65	5S	280,00	170,00	U	T	-	TR-200A-40A
200A x 50A	216,30 x 60,50	4,00	10S	1,65	5S	280,00	170,00	U	T	-	TR-200A-50A
200A x 65A	216,30 x 76,30	4,00	10S	2,10	5S	320,00	180,00	U	T	-	TR-200A-65A
200A x 80A	216,30 x 89,10	4,00	10S	2,10	5S	320,00	180,00	U	T	-	TR-200A-80A
200A x 100A	216,30 x 114,30	4,00	10S	2,10	5S	320,00	180,00	U	T	-	TR-200A-100A
200A x 125A	216,30 x 139,80	4,00	10S	2,80	5S	360,00	190,00	U	T	-	TR-200A-125A
200A x 150A	216,30 x 165,20	4,00	10S	2,80	5S	360,00	190,00	U	T	-	TR-200A-150A
200A x 200A	216,30 x 216,30	4,00	10S	2,80	10S	380,00	190,00	U	T	-	TE-200A

Further dimesions on request.

For Order Code please combine:
Quality[A] - Product Code[B] + Diameter[C]

A-Size

JIS G 3459	d1 x d2	s1	Wall Thickness Schedule	s2	Schedule	Length l3	l2	ultron	TCC		Product Code[B] + Diameter[C]
	mm	mm		mm		mm	mm	SUS 316 LTP			
250A x 25A	267,40 x 34,00	4,00	10S	1,65	5S	260,00	190,00	U	T	-	TR-250A-25A
250A x 32A	267,40 x 42,70	4,00	10S	1,65	5S	300,00	200,00	U	T	-	TR-250A-32A
250A x 40A	267,40 x 48,60	4,00	10S	1,65	5S	300,00	200,00	U	T	-	TR-250A-40A
250A x 50A	267,40 x 60,50	4,00	10S	1,65	5S	300,00	200,00	U	T	-	TR-250A-50A
250A x 65A	267,40 x 76,30	4,00	10S	2,10	5S	340,00	210,00	U	T	-	TR-250A-65A
250A x 80A	267,40 x 89,10	4,00	10S	2,10	5S	340,00	210,00	U	T	-	TR-250A-80A
250A x 100A	267,40 x 114,30	4,00	10S	2,10	5S	340,00	210,00	U	T	-	TR-250A-100A
250A x 125A	267,40 x 139,80	4,00	10S	2,80	5S	380,00	220,00	U	T	-	TR-250A-125A
250A x 150A	267,40 x 165,20	4,00	10S	2,80	5S	380,00	220,00	U	T	-	TR-250A-150A
250A x 200A	267,40 x 216,30	4,00	10S	4,00	10S	380,00	220,00	U	T	-	TR-250A-200A
250A x 250A	267,40 x 267,40	4,00	10S	4,00	10S	460,00	230,00	U	T	-	TE-250A
300A x 25A	318,50 x 34,00	4,50	10S	1,65	5S	300,00	230,00	U	T	-	TR-300A-25A
300A x 32A	318,50 x 42,70	4,50	10S	1,65	5S	340,00	240,00	U	T	-	TR-300A-32A
300A x 40A	318,50 x 48,60	4,50	10S	1,65	5S	340,00	240,00	U	T	-	TR-300A-40A
300A x 50A	318,50 x 60,50	4,50	10S	1,65	5S	340,00	240,00	U	T	-	TR-300A-50A
300A x 65A	318,50 x 76,30	4,50	10S	2,10	5S	380,00	250,00	U	T	-	TR-300A-65A
300A x 80A	318,50 x 89,10	4,50	10S	2,10	5S	380,00	250,00	U	T	-	TR-300A-80A
300A x 100A	318,50 x 114,30	4,50	10S	2,10	5S	380,00	250,00	U	T	-	TR-300A-100A
300A x 150A	318,50 x 165,20	4,50	10S	2,80	5S	500,00	260,00	U	T	-	TR-300A-150A
300A x 200A	318,50 x 216,30	4,50	10S	4,00	10S	500,00	260,00	U	T	-	TR-300A-200A
300A x 250A	318,50 x 267,40	4,50	10S	4,00	10S	500,00	260,00	U	T	-	TR-300A-250A
300A x 300A	318,50 x 318,50	4,50	10S	4,50	10S	534,00	267,00	U	T	-	TE-300A

Further dimesions on request.

For Order Code please combine:
Quality[A] - Product Code[B] + Diameter[C]

CONCENTRIC REDUCER
IMPERIAL

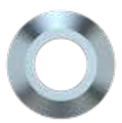

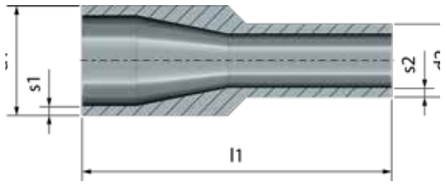

Imperial

d1 x d2			s1	s2	l3	ultron	TCC		Product Code[B] + Diameter[C]		ltp add-on	ltp add-on	vim var add-on
Inch	mm			mm		316L					Options		
3/8 x 1/4	9,53	x 6,35	0,89	0,89	41,28	U	T	-	RC-06-04	-	LTP		V*
1/2 x 1/4	12,70	x 6,35	1,24	0,89	38,00	U	T	-	RC-08-04	-	LTP		V*
1/2 x 3/8	12,70	x 9,53	1,24	0,89	38,00	U	T	-	RC-08-06	-	LTP		V*
3/4 x 1/4	19,05	x 6,35	1,65	0,89	38,00	U	T	-	RC-12-04	-	LTP		V*
3/4 x 3/8	19,05	x 9,53	1,65	0,89	50,80	U	T	-	RC-12-06	-	LTP		V*
3/4 x 1/2	19,05	x 12,70	1,65	1,24	60,00	U	T	-	RC-12-08	-	LTP		V*
1 x 1/2	25,40	x 12,70	1,65	1,24	60,00	U	T	-	RC-16-08	-	LTP		V*
1 x 3/4	25,40	x 19,05	1,65	1,65	53,98	U	T	-	RC-16-12	-	LTP		V*
1 1/2 x 1/2	38,10	x 12,70	1,65	1,24	80,00	U	T	-	RC-24-08	-	LTP		
1 1/2 x 3/4	38,10	x 19,05	1,65	1,65	76,20	U	T	-	RC-24-12	-	LTP		
1 1/2 x 1	38,10	x 25,40	1,65	1,65	63,50	U	T	-	RC-24-16	-	LTP		
2 x 1	50,80	x 25,40	1,65	1,65	85,73	U	T	-	RC-32-16	-	LTP		
2 x 1 1/2	50,80	x 38,10	1,65	1,65	63,50	U	T	-	RC-32-24	-	LTP		
2 1/2 x 1	63,50	x 25,40	1,65	1,65	100,00	U	T	-	RC-40-16	-	LTP		
2 1/2 x 1 1/2	63,50	x 38,10	1,65	1,65	85,73	U	T	-	RC-40-24	-	LTP		
2 1/2 x 2	63,50	x 50,80	1,65	1,65	63,50	U	T	-	RC-40-32	-	LTP		
3 x 1 1/2	76,20	x 38,10	1,65	1,65	107,95	U	T	-	RC-48-24	-	LTP		
3 x 2	76,20	x 50,80	1,65	1,65	85,73	U	T	-	RC-48-32	-	LTP		
3 x 2 1/2	76,20	x 63,50	1,65	1,65	66,68	U	T	-	RC-48-40	-	LTP		
4 x 2	101,60	x 50,80	2,11	1,65	130,18	U	T	-	RC-64-32	-	LTP		
4 x 2 1/2	101,60	x 63,50	2,11	1,65	107,95	U	T	-	RC-64-40	-	LTP		
4 x 3	101,60	x 76,20	2,11	1,65	98,43	U	T	-	RC-64-48	-	LTP		
6 x 3	152,40	x 76,20	2,77	1,65	184,15	U	T	-	RC-96-48	-	LTP		
6 x 4	152,40	x 101,60	2,77	2,11	142,88	U	T	-	RC-96-64	-	LTP		

*VimVar only available for ultron.

Further dimmensions on request.

For Order Code please combine:
Quality[A] - Product Code[B] + Diameter[C] (+ add-on for VimVar)

CONCENTRIC REDUCER
A-SIZE

JIS G 3459	d1 x d2	s1	Wall Thickness Schedule	s2	Wall Thickness Schedule	Length l1	ultron	TCC		Product Code[B] + Diameter[C]
	mm	mm		mm		mm	SUS 316 LTP			
20A x 15A	27,20 x 21,70	1,65	5S	1,65	5S	105,00	U	T	-	RC-20A-15A
25A x 15A	34,00 x 21,70	1,65	5S	1,65	5S	120,00	U	T	-	RC-25A-15A
25A x 20A	34,00 x 27,20	1,65	5S	1,65	5S	120,00	U	T	-	RC-25A-20A
32A x 15A	42,70 x 21,70	1,65	5S	1,65	5S	125,00	U	T	-	RC-32A-15A
32A x 20A	42,70 x 27,20	1,65	5S	1,65	5S	125,00	U	T	-	RC-32A-20A
32A x 25A	42,70 x 34,00	1,65	5S	1,65	5S	83,70	U	T	-	RC-32A-25A
40A x 15A	48,60 x 21,70	1,65	5S	1,65	5S	130,00	U	T	-	RC-40A-15A
40A x 20A	48,60 x 27,20	1,65	5S	1,65	5S	130,00	U	T	-	RC-40A-20A
40A x 25A	48,60 x 34,00	1,65	5S	1,65	5S	84,80	U	T	-	RC-40A-25A
40A x 32A	48,60 x 42,70	1,65	5S	1,65	5S	93,20	U	T	-	RC-40A-32A
50A x 15A	60,50 x 21,70	1,65	5S	1,65	5S	140,00	U	T	-	RC-50A-15A
50A x 20A	60,50 x 27,20	1,65	5S	1,65	5S	140,00	U	T	-	RC-50A-20A
50A x 25A	60,50 x 34,00	1,65	5S	1,65	5S	140,00	U	T	-	RC-50A-25A
50A x 32A	60,50 x 42,70	1,65	5S	1,65	5S	95,30	U	T	-	RC-50A-32A
50A x 40A	60,50 x 48,60	1,65	5S	1,65	5S	94,30	U	T	-	RC-50A-40A
65A x 15A	76,30 x 21,70	2,10	5S	1,65	5S	165,00	U	T	-	RC-65A-15A
65A x 20A	76,30 x 27,20	2,10	5S	1,65	5S	165,00	U	T	-	RC-65A-20A
65A x 25A	76,30 x 34,00	2,10	5S	1,65	5S	165,00	U	T	-	RC-65A-25A
65A x 32A	76,30 x 42,70	2,10	5S	1,65	5S	103,40	U	T	-	RC-65A-32A
65A x 40A	76,30 x 48,60	2,10	5S	1,65	5S	102,10	U	T	-	RC-65A-40A
65A x 50A	76,30 x 60,50	2,10	5S	1,65	5S	165,00	U	T	-	RC-65A-50A
80A x 15A	89,10 x 21,70	2,10	5S	1,65	5S	170,00	U	T	-	RC-80A-15A
80A x 20A	89,10 x 27,20	2,10	5S	1,65	5S	170,00	U	T	-	RC-80A-20A
80A x 25A	89,10 x 34,00	2,10	5S	1,65	5S	170,00	U	T	-	RC-80A-25A
80A x 32A	89,10 x 42,70	2,10	5S	1,65	5S	170,00	U	T	-	RC-80A-32A
80A x 40A	89,10 x 48,60	2,10	5S	1,65	5S	104,50	U	T	-	RC-80A-40A
80A x 50A	89,10 x 60,50	2,10	5S	1,65	5S	170,00	U	T	-	RC-80A-50A
80A x 65A	89,10 x 76,30	2,10	5S	2,10	5S	104,40	U	T	-	RC-80A-65A
100A x 15A	114,30 x 21,70	2,10	5S	1,65	5S	180,00	U	T	-	RC-100A-15A
100A x 20A	114,30 x 27,20	2,10	5S	1,65	5S	180,00	U	T	-	RC-100A-20A
100A x 25A	114,30 x 34,00	2,10	5S	1,65	5S	180,00	U	T	-	RC-100A-25A
100A x 32A	114,30 x 42,70	2,10	5S	1,65	5S	180,00	U	T	-	RC-100A-32A
100A x 40A	114,30 x 48,60	2,10	5S	1,65	5S	131,20	U	T	-	RC-100A-40A
100A x 50A	114,30 x 60,50	2,10	5S	1,65	5S	180,00	U	T	-	RC-100A-50A
100A x 65A	114,30 x 76,30	2,10	5S	2,10	5S	109,00	U	T	-	RC-100A-65A
100A x 80A	114,30 x 89,10	2,10	5S	2,10	5S	180,00	U	T	-	RC-100A-80A

Further dimesions on request.

For Order Code please combine:
Quality[A] - Product Code[B] + Diameter[C]

CONCENTRIC REDUCER
A-SIZE

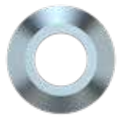

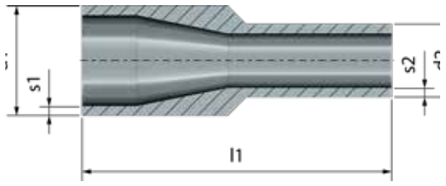

JIS G 3459	d1 x d2	s1	Wall Thickness Schedule	s2	Schedule	Length l1	ultron	TCC		Product Code[B] + Diameter[C]
	mm	mm		mm		mm	SUS 316 LTP			
125A x 15A	139,80 x 21,70	2,80	5S	1,65	5S	250,00	U	T	-	RC-125A-15A
125A x 20A	139,80 x 27,20	2,80	5S	1,65	5S	250,00	U	T	-	RC-125A-20A
125A x 25A	139,80 x 34,00	2,80	5S	1,65	5S	250,00	U	T	-	RC-125A-25A
125A x 32A	139,80 x 42,70	2,80	5S	1,65	5S	250,00	U	T	-	RC-125A-32A
125A x 40A	139,80 x 48,60	2,80	5S	1,65	5S	250,00	U	T	-	RC-125A-40A
125A x 50A	139,80 x 60,50	2,80	5S	1,65	5S	250,00	U	T	-	RC-125A-50A
125A x 65A	139,80 x 76,30	2,80	5S	2,10	5S	250,00	U	T	-	RC-125A-65A
125A x 80A	139,80 x 89,10	2,80	5S	2,10	5S	250,00	U	T	-	RC-125A-80A
125A x 100A	139,80 x 114,30	2,80	5S	2,10	5S	250,00	U	T	-	RC-125A-100A
150A x 15A	165,20 x 21,70	2,80	5S	1,65	5S	260,00	U	T	-	RC-150A-15A
150A x 20A	165,20 x 27,20	2,80	5S	1,65	5S	260,00	U	T	-	RC-150A-20A
150A x 25A	165,20 x 34,00	2,80	5S	1,65	5S	260,00	U	T	-	RC-150A-25A
150A x 32A	165,20 x 42,70	2,80	5S	1,65	5S	260,00	U	T	-	RC-150A-32A
150A x 40A	165,20 x 48,60	2,80	5S	1,65	5S	260,00	U	T	-	RC-150A-40A
150A x 50A	165,20 x 60,50	2,80	5S	1,65	5S	260,00	U	T	-	RC-150A-50A
150A x 65A	165,20 x 76,30	2,80	5S	2,10	5S	150,90	U	T	-	RC-150A-65A
150A x 80A	165,20 x 89,10	2,80	5S	2,10	5S	260,00	U	T	-	RC-150A-80A
150A x 100A	165,20 x 114,30	2,80	5S	2,10	5S	118,00	U	T	-	RC-150A-100A
150A x 125A	165,20 x 139,80	2,80	5S	2,80	5S	260,00	U	T	-	RC-150A-125A

Further dimesions on request.

For Order Code please combine:
Quality[A] - Product Code[B] + Diameter[C]

JIS G 3459	d1 x d2	s1	Wall Thickness Schedule	s2	Schedule	Length l1	ultron	TCC		Product Code[B] + Diameter[C]
	mm	mm		mm		mm	SUS 316 LTP			
200A x 15A	216,30 x 21,70	4,00	10S	1,65	5S	280,00	U	T	-	RC-200A-15A
200A x 25A	216,30 x 34,00	4,00	10S	1,65	5S	280,00	U	T	-	RC-200A-25A
200A x 32A	216,30 x 42,70	4,00	10S	1,65	5S	280,00	U	T	-	RC-200A-32A
200A x 40A	216,30 x 48,60	4,00	10S	1,65	5S	280,00	U	T	-	RC-200A-40A
200A x 50A	216,30 x 60,50	4,00	10S	1,65	5S	280,00	U	T	-	RC-200A-50A
200A x 65A	216,30 x 76,30	4,00	10S	2,10	5S	280,00	U	T	-	RC-200A-65A
200A x 80A	216,30 x 89,10	4,00	10S	2,10	5S	280,00	U	T	-	RC-200A-80A
200A x 100A	216,30 x 114,30	4,00	10S	2,10	5S	280,00	U	T	-	RC-200A-100A
200A x 125A	216,30 x 139,80	4,00	10S	2,80	5S	280,00	U	T	-	RC-200A-125A
200A x 150A	216,30 x 165,20	4,00	10S	2,80	5S	280,00	U	T	-	RC-200A-150A
250A x 25A	267,40 x 34,00	4,00	10S	1,65	5S	300,00	U	T	-	RC-250A-25A
250A x 32A	267,40 x 42,70	4,00	10S	1,65	5S	300,00	U	T	-	RC-250A-32A
250A x 40A	267,40 x 48,60	4,00	10S	1,65	5S	300,00	U	T	-	RC-250A-40A
250A x 50A	267,40 x 60,50	4,00	10S	1,65	5S	300,00	U	T	-	RC-250A-50A
250A x 65A	267,40 x 76,30	4,00	10S	2,10	5S	300,00	U	T	-	RC-250A-65A
250A x 80A	267,40 x 89,10	4,00	10S	2,10	5S	300,00	U	T	-	RC-250A-80A
250A x 100A	267,40 x 114,30	4,00	10S	2,10	5S	300,00	U	T	-	RC-250A-100A
250A x 125A	267,40 x 139,80	4,00	10S	2,80	5S	300,00	U	T	-	RC-250A-125A
250A x 150A	267,40 x 165,20	4,00	10S	2,80	5S	300,00	U	T	-	RC-250A-150A
250A x 200A	267,40 x 216,30	4,00	10S	4,00	10S	300,00	U	T	-	RC-250A-200A
300A x 25A	318,50 x 34,00	4,50	10S	1,65	5S	325,00	U	T	-	RC-300A-25A
300A x 32A	318,50 x 42,70	4,50	10S	1,65	5S	325,00	U	T	-	RC-300A-32A
300A x 40A	318,50 x 48,60	4,50	10S	1,65	5S	325,00	U	T	-	RC-300A-40A
300A x 50A	318,50 x 60,50	4,50	10S	1,65	5S	325,00	U	T	-	RC-300A-50A
300A x 65A	318,50 x 76,30	4,50	10S	2,10	5S	325,00	U	T	-	RC-300A-65A
300A x 80A	318,50 x 89,10	4,50	10S	2,10	5S	325,00	U	T	-	RC-300A-80A
300A x 100A	318,50 x 114,30	4,50	10S	2,10	5S	325,00	U	T	-	RC-300A-100A
300A x 150A	318,50 x 165,20	4,50	10S	2,80	5S	325,00	U	T	-	RC-300A-150A
300A x 200A	318,50 x 216,30	4,50	10S	4,00	10S	325,00	U	T	-	RC-300A-200A
300A x 250A	318,50 x 267,40	4,50	10S	4,00	10S	325,00	U	T	-	RC-300A-250A

Further dimesions on request.

For Order Code please combine:
Quality[A] - Product Code[B] + Diameter[C]

WELD CAP
IMPERIAL

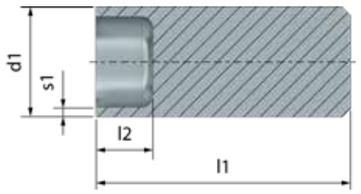

Imperial

d1		s1	l1	l2	ultron	TCC		Product Code[B] + Diameter[C]		ltp add-on / ltp add-on
Inch	mm		mm		316L					Options
1/4	6,35	0,89	34,75	5,00	U	T	-	WC-04	-	LTP
3/8	9,53	0,89	44,45	5,00	U	T	-	WC-06	-	LTP
1/2	12,70	1,24	44,45	5,00	U	T	-	WC-08	-	LTP
3/4	19,05	1,65	44,45	10,00	U	T	-	WC-12	-	LTP
1	25,40	1,65	44,45	10,00	U	T	-	WC-16	-	LTP
1 1/2	38,10	1,65	50,80	10,00	U	T	-	WC-24	-	LTP
2	50,80	1,65	50,80	15,00	U	T	-	WC-32	-	LTP
2 1/2	63,50	1,65	50,80	15,00	U	T	-	WC-40	-	LTP
3	76,20	1,65	50,80	15,00	U	T	-	WC-48	-	LTP
4*	101,60	2,11	63,50	22,50	U	T	-	WC-64	-	LTP
6*	152,40	2,77	200.00*	150,00	U	T	-	WC-96	-	LTP

Further dimmensions on request.

* Differing design: not machined but formed end welded to tube stub

For Order Code please combine:
Quality[A] - Product Code[B] + Diameter[C]

WELD CAP
A-SIZE

A-Size

d1		s1	l1	ultron	TCC		Product Code[B] + Diameter[C]
JIS G 3459	mm		mm	SUS 316 LTP			
15A	21,70	1,65	25,40	U	T	-	WC-15A
20A	27,20	1,65	25,40	U	T	-	WC-20A
25A	34,00	1,65	38,10	U	T	-	WC-25A
32A	42,70	1,65	38,10	U	T	-	WC-32A
40A	48,60	1,65	38,10	U	T	-	WC-40A
50A	60,50	1,65	38,10	U	T	-	WC-50A
65A	76,30	2,10	38,10	U	T	-	WC-65A
80A	89,10	2,10	50,80	U	T	-	WC-80A
90A	101,60	2,10	63,50	U	T	-	WC-90A
100A	114,30	2,10	63,50	U	T	-	WC-100A
125A	139,80	2,80	76,20	U	T	-	WC-125A
150A	165,20	2,80	88,90	U	T	-	WC-150A

For Order Code please combine:
Quality[A] - Product Code[B] + Diameter[C]

REMOVABLE WELD CAP (DOCKWEILER CAP TYPE A)
IMPERIAL

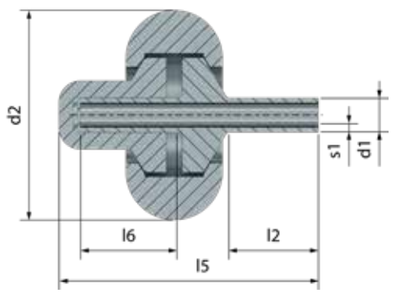

Imperial

Inch	Type	d1	s1	l2	l5	d5	d6	l6	Quality[A]		Product Code[B] + Diameter[C]
		mm							316L		
1/4	A	0,89	19,05	48,40	39,00	–	26,65		U	-	DC-04

For Order Code please combine:
Quality[A] - Product Code[B] + Diameter[C]

REMOVABLE WELD CAP (DOCKWEILER CAP TYPE B)
IMPERIAL

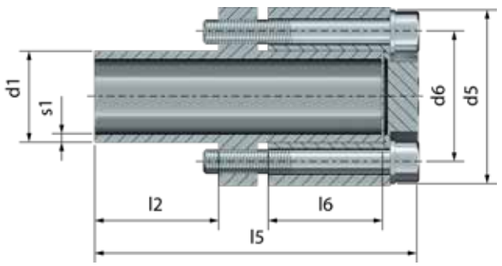

Imperial

Inch	Type	d1	s1	l2	l5	d5	d6	l6	Quality[A]		Product Code[B] + Diameter[C]
		mm							316L		
1/2	B	1,24	26,00	66,60	27,30	19,30	26,00		U	-	DC-08
3/4	B	1,65	26,00	67,30	37,05	27,05	26,00		U	-	DC-12
1	B	1,65	26,00	68,30	43,40	33,40	26,00		U	-	DC-16
1 1/2	B	1,65	30,00	77,30	57,90	46,90	30,00		U	-	DC-24
2	B	1,65	45,00	109,30	70,60	59,60	45,00		U	-	DC-32
2 1/2	B	1,65	45,00	110,30	83,30	72,30	45,00		U	-	DC-40
3	B	1,65	45,00	111,30	96,00	85,00	45,00		U	-	DC-48
4	B	2,11	55,00	132,30	121,40	110,40	55,00		U	-	DC-64
6	B	2,77	55,00	134,30	172,20	161,20	55,00		U	-	DC-96

For Order Code please combine:
Quality[A] - Product Code[B] + Diameter[C]

ZEROCON
UP TO 1"

Complete Kit

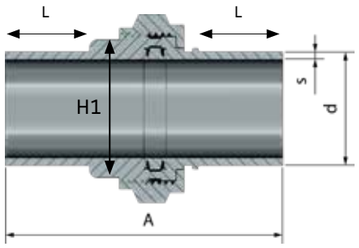

Dimmensi-ons	d	s	A	L	H1	H2	ultron	TCC		Product Code[B] + Diameter[C]
System		Inch			Inch		316L			
20-1	6,35	0,89	62,80	19,00	7/16"	3/4"	U	F	-	Z-SK-04
40-2	9,53	0,89	62,80	19,00	9/16"	15/16"	U	F	-	Z-SK-06
60-3	12,70	1,24	62,80	19,00	5/8"	1 1/16"	U	F	-	Z-SK-08
50-3	12,70	1,65	62,30	19,00	5/8"	1 1/4"	U	F	-	Z-SK-08-65
100-4	19,05	1,24	62,30	19,00	7/8"	1 1/2"	U	F	-	Z-SK-12-49
90-4	19,05	1,65	62,80	19,00	7/8"	1 1/4"	U	F	-	Z-SK-12
130-5	25,40	1,65	62,80	19,00	1 1/16"	1 1/2"	U	F	-	Z-SK-16

For Order Code please combine:
Quality[A] - Product Code[B] + Diameter[C]

The ZeroCon Kit consists of:
- Pressure joint (1x)
- Screw joint (1x)
- Metal gasket (1x)
- Nut (1x)
- Assembly instruction

Please follow the assembly instructions for the correct use of the tool. The instruction is part of the ZeroCon kit.

The ZeroCon Disassembly Tool Order Code: **Z-SDT**

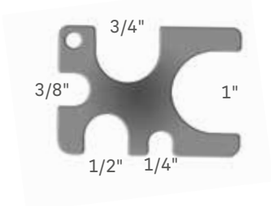

ZEROCON UP TO 1"
GASKETS AND NUTS

Please note: The **system size** for the screwed ZeroCon kit is always based on the **number for the gasket** and the **number for the connecting nut**

Gaskets	Tube (d)	ultron	TCC		Product Code[B] + Diameter[C]
System	mm	316L			
20	8,95	U	F	-	Z-SR-04
40	12,35	U	F	-	Z-SR-06
60	15,25	U	F	-	Z-SR-08
50	15,25	U	F	-	Z-SR-08-65
100	21,60	U	F	-	Z-SR-12-49
90	21,60	U	F	-	Z-SR-12
130	27,20	U	F	-	Z-SR-16

For Order Code please combine:
Quality[A] - Product Code[B] + Diameter[C]

Nuts	Tube (d)	Code
System	Inch	
1	1/4	Z-N-04
2	3/8	Z-N-06
3	1/2	Z-N-08
4	3/4	Z-N-12
5	1	Z-N-16

ZEROCON
FROM 1" WITH FLANGES

Complete Kit

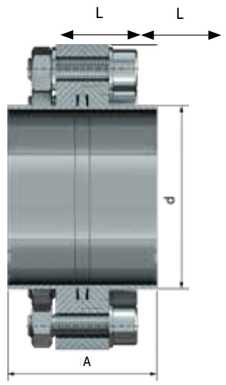

Dimmensions				Wrench Size			ultron	TCC		Product Code[B] + Diameter[C]
d	s	A	L	Screw Set	H1	H2				
Inch							316L			
1	1,65	58,00	20,00	1F	10 (3/8")	5 (3/16")	U	F	-	Z-FK-16
1 1/2	1,65	62,00	20,00	2F	13 (1/2")	6 (7/32")	U	F	-	Z-FK-24
2	1,65	62,00	20,00	2F	13 (1/2")	6 (7/32")	U	F	-	Z-FK-32
3	1,65	62,00	20,00	3F	16 (5/8")	8 (5/16")	U	F	-	Z-FK-48
4	2,11	62,00	20,00	4F	16 (5/8")	8 (5/16")	U	F	-	Z-FK-64

For Order Code please combine:
Quality[A] - Product Code[B] + Diameter[C]

Gaskets		ultron	TCC		Product Code[B] + Diameter[C]
Inch	d (mm)	316L			
1	27,20	U	F	-	Z-SR-16
1 1/2	42,90	U	F	-	Z-SR-24
2	56,60	U	F	-	Z-SR-32
3	85,00	U	F	-	Z-SR-48
4	109,65	U	F	-	Z-SR-64

For Order Code please combine:
Quality[A] - Product Code[B] + Diameter[C]

The ZeroCon Kit consists of:
- Fixed flange (1x)
- Rotatable flange (1x)
- Metal gasket (1x)
- Screw set (1x)
- Assembly instruction

Please follow the assembly instructions for the correct use of the tool. The instruction is part of the ZeroCon kit.

Disassembly Tool	Dimmensions of Screws	Order Code
System	Bolt / mm	
1F	M6 x 30	Z-FDT-M6
2F	M8 x 35	Z-FDT-M8
3F	M10 x 35	Z-FDT-M10
4F	M10 x 35	Z-FDT-M10

Screw Set	Dimmensions of Screws		Ammount of Screws	Lock washer	Order Code
System	Bolt / mm	Nut / mm			
1F	M6 x 30	M6 x 1	6	SWS-M6	Z-SN-M6
2F	M8 x 35	M8 x 1	8	SWS-M8	Z-SN-M8
3F	M10 x 35	M10 x 1	8	SWS-M10	Z-SN-M10-8
4F	M10 x 35	M10 x 1	10	SWS-M10	Z-SN-M10-10

COAX – The Coaxial Tube System

COAX double wall tube system is a safe solution for transport of explosive, toxic, corrosive, or highly viscous media. COAX tubes and fittings consist of an inner process tube and an outer safety tube. Spacers on the inside ensure safe flow.

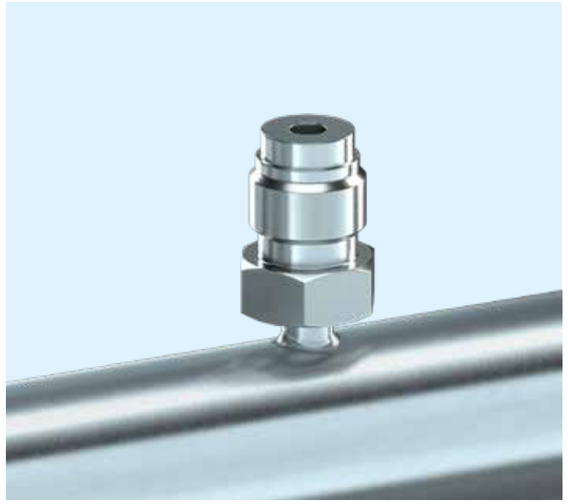

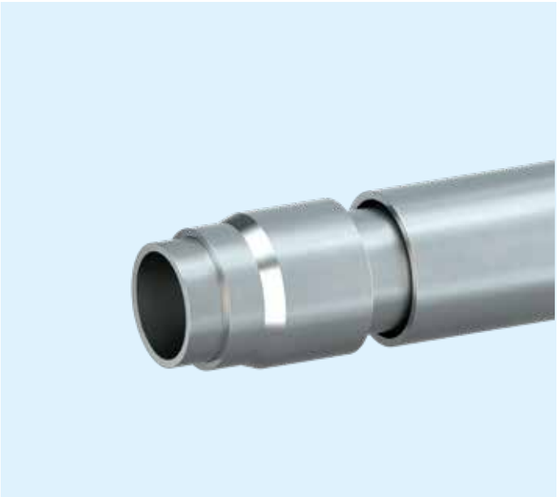

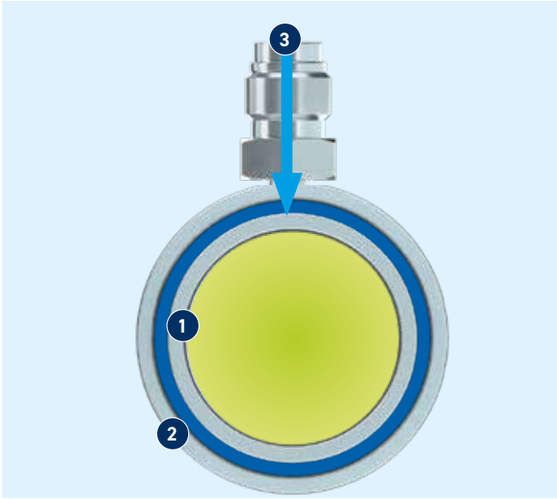

Design of the COAX Tube System

1. **Inner process tube (ultron or TCC)**
   For explosive, toxic, aggressive or highly viscous media.
2. **Outer safety tube (TCC)**
   For safety or accumulation as well as for temperature-controlled media for heating or cooling.
3. **VCR® connector**
   The interface of the VCR® connection enables sensory measurements.

VCR® is a registered trademark of Swagelok Company, USA

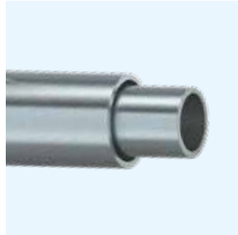

Coaxial Tubing

Page 42

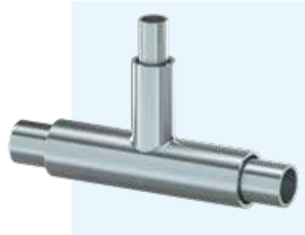

Coaxial Tee / Reducing Tee

Page 44

Coaxial 45° Elbow

Page 46

Coaxial 90° Elbow

Page 47

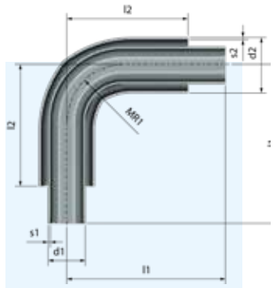

Coaxial Weld Sleeve

Page 48

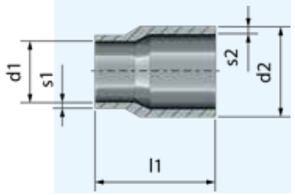

Coaxial Terminator

Page 49

Coaxial Purge Tee

Page 50

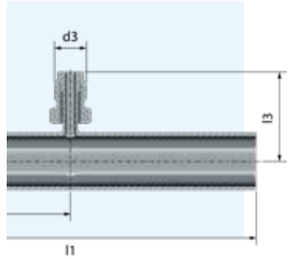

Coaxial Bulk-head Purge Tees

Page 51

COAXIAL TUBING
IMPERIAL

Imperial

Inner Tube[1)]		Outer Tube[2)]		ultron		Product Code[B] + Diameter[C]		ltp add-on	V*im V*ar add-on
d1	s1	d2	s2						
Inch	mm	Inch	mm	316L				Options	
1/4	0,89	1/2	1,24	U	-	CO-04	-	LTP	V*
3/8	0,89	5/8	1,24	U	-	CO-06	-	LTP	V*
1/2	1,24	3/4	1,65	U	-	CO-08	-	LTP	V*
3/4	1,65	1	1,65	U	-	CO-12	-	LTP	V*
1	1,65	1 1/2	1,65	U	-	CO-16	-	LTP	V*

*VimVar only available for ultron.

Further dimmensions on request.

For Order Code please combine: Quality[A] - Product Code[B] + Diameter[C] (+ add-on for LTP / VimVar)

ALLOY 22 – FOR HIGHLY-CORROSIVE MEDIA

Imperial

Inner Tube		Outer Tube		ultron		Product Code[B] + Diameter[C]		Alloy 22 add-on
d1	s1	d2	s2					
Inch								Options
1/4	0,89	1/2	1,24	U	-	CO-04	-	22
3/8	0,89	5/8	1,24	U	-	CO-06	-	22
1/2	1,24	3/4	1,65	U	-	CO-08	-	22
3/4	1,65	1	1,65	U	-	CO-12	-	22
1	1,65	1 1/2	1,65	U	-	CO-16	-	22

[1) 2)] Inner tube Alloy 22, outer tube 316L or 304L (bf).

Coaxial tube represented using inner tube dimmensions.

Further dimmensions on request.

For Order Code please combine:
Quality[A] - Product Code[B] + Diameter[C] + add-on for **Alloy 22**

COAXIAL TEE / COAXIAL REDUCING TEE
IMPERIAL

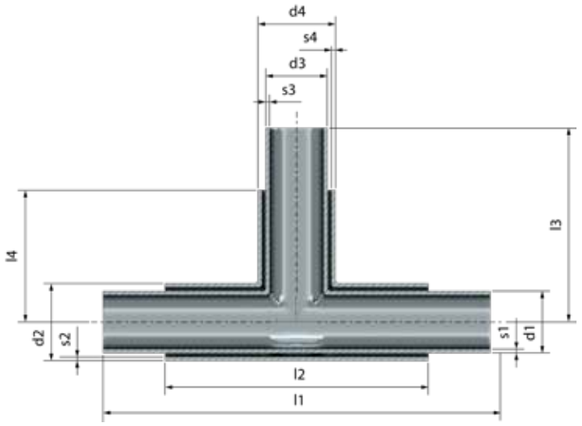

Imperial	Inner Tube				Outer Tube				Main Tube		Branch						
	Main Tube		Branch		Main Tube		Branch		Inner Tube	Outer Tube	Outer Tube	Inner Tube	ultron		Product Code[B] + Diameter[C]		ltp add-on	vim var add-on
	d1	s1	d3	s3	d2	s2	d4	s4	l1	l2	l3	l4	316L				Options	
	Inch				mm				mm									
1/4 x 1/4	6,35	0,89	6,35	0,89	12,70	1,24	12,70	1,24	127,00	88,90	63,50	44,45	U	-	CTE-04	-	LTP	V
3/8 x 1/4	9,53	0,89	6,35	0,89	15,88	1,24	12,70	1,24	127,00	88,90	63,50	44,45	U	-	CTR-06-04	-	LTP	V
3/8 x 3/8	9,53	0,89	9,53	0,89	15,88	1,24	15,88	1,24	127,00	88,90	63,50	44,45	U	-	CTE-06	-	LTP	V
1/2 x 1/4	12,70	1,24	6,35	0,89	19,05	1,65	12,70	1,24	133,35	95,25	66,68	47,63	U	-	CTR-08-04	-	LTP	V
1/2 x 3/8	12,70	1,24	9,53	0,89	19,05	1,65	15,88	1,24	133,35	95,25	66,68	47,63	U	-	CTR-08-06	-	LTP	V
1/2 x 1/2	12,70	1,24	12,70	1,24	19,05	1,65	19,05	1,65	133,35	95,25	66,68	47,63	U	-	CTE-08	-	LTP	V
3/4 x 1/4	19,05	1,65	6,35	0,89	25,40	1,65	12,70	1,24	133,35	95,25	66,68	47,63	U	-	CTR-12-04	-	LTP	V
3/4 x 3/8	19,05	1,65	9,53	0,89	25,40	1,65	15,88	1,24	133,35	95,25	66,68	47,63	U	-	CTR-12-06	-	LTP	V
3/4 x 1/2	19,05	1,65	12,70	1,24	25,40	1,65	19,05	1,65	133,35	95,25	66,68	47,63	U	-	CTR-12-08	-	LTP	V
3/4 x 3/4	19,05	1,65	19,05	1,65	25,40	1,65	25,40	1,65	133,35	95,25	66,68	47,63	U	-	CTE-12	-	LTP	V
1 x 1/4	25,40	1,65	6,35	0,89	38,10	1,65	12,70	1,24	158,75	107,95	79,38	53,98	U	-	CTR-16-04	-	LTP	V
1 x 3/8	25,40	1,65	9,53	0,89	38,10	1,65	15,88	1,24	158,75	107,95	79,38	53,98	U	-	CTR-16-06	-	LTP	V
1 x 1/2	25,40	1,65	12,70	1,24	38,10	1,65	19,05	1,65	158,75	107,95	79,38	53,98	U	-	CTR-16-08	-	LTP	V
1 x 3/4	25,40	1,65	19,05	1,65	38,10	1,65	25,40	1,65	158,75	107,95	79,38	53,98	U	-	CTR-16-12	-	LTP	V
1 x 1	25,40	1,65	25,40	1,65	38,10	1,65	38,10	1,65	158,75	107,95	79,38	53,98	U	-	CTE-16	-	LTP	V

*VimVar only available for ultron.

Further dimmensions and qualities on request.

For Order Code please combine: Quality[A] - Product Code[B] + Diameter[C] (+ add-on for LTP / VimVar)

COAXIAL 45° ELBOW
IMPERIAL

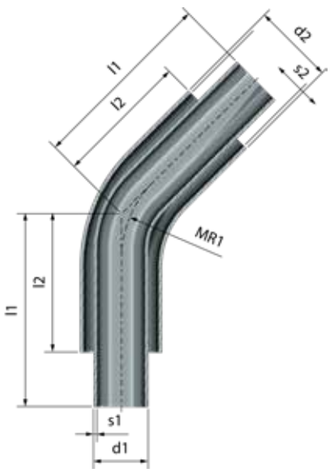

Imperial

Dimmensions												
Inner Tube			Outer Tube			Radius	ultron		Product Code[B] + Diameter[C]		ltp add-on	vim var add-on
d1	s1	l1	d2	s2	l2	MR1						
Inch	mm		mm				316 L				Options	
1/4	0,89	12,70	1,24	98,45	79,40	38,10	U	-	CE4-04	-	LTP	V*
3/8	0,89	15,88	1,24	98,45	79,40	57,00	U	-	CE4-06	-	LTP	V*
1/2	1,24	19,05	1,65	109,26	90,21	85,00	U	-	CE4-08	-	LTP	V*
3/4	1,65	25,40	1,65	135,61	110,21	85,00	U	-	CE4-12	-	LTP	V*
1	1,65	38,10	1,65	88,90	63,50	38,10	U	-	CE4-16	-	LTP	V*

For Order Code please combine:
Quality[A] - Product Code[B] + Diameter[C]

Bent: 1/4- 3/4" / welded: 1"

*VimVar only available for ultron.

Further dimmensions and qualities on request.

COAXIAL 90° ELBOW
IMPERIAL

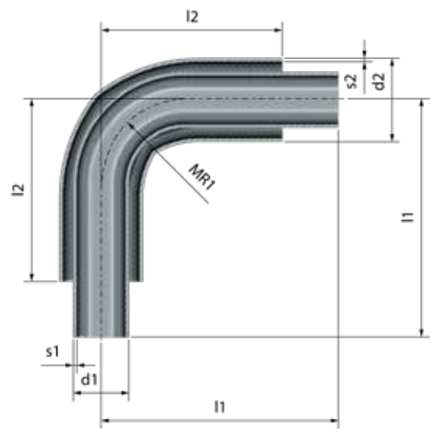

Imperial

Dimmensions												
Inner Tube			Outer Tube			Radius	ultron		Product Code[B] + Diameter[C]		ltp add-on	vim var add-on
d1	s1	l1	d2	s2	l2	MR1						
Inch	mm		mm				316 L				Options	
1/4	0,89	12,70	1,24	120,70	101,65	38,10	U	-	CE9-04	-	LTP	V*
3/8	0,89	15,88	1,24	130,70	111,65	57,00	U	-	CE9-06	-	LTP	V*
1/2	1,24	19,05	1,65	184,40	165,35	85,00	U	-	CE9-08	-	LTP	V*
3/4	1,65	25,40	1,65	190,75	165,35	85,00	U	-	CE9-12	-	LTP	V*
1	1,65	38,10	1,65	107,97	82,57	38,10	U	-	CE9-16	-	LTP	V*

For Order Code please combine:
Quality[A] - Product Code[B] + Diameter[C]

*VimVar only available for ultron.

Further dimmensions and qualities on request.

COAXIAL WELD SLEEVE
IMPERIAL

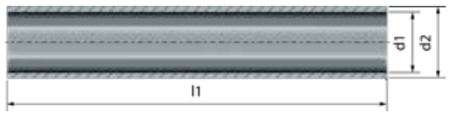

Imperial	For outer tube	Sleeve			TCC		Product Code[B] + Diameter[C]
	d	d1	d2	l1			
Inch	mm		mm				
1/4	12,70	12,90	15,88	101,60	T	-	CS-04
3/8	15,87	16,11	19,05	101,60	T	-	CS-06
1/2	19,05	19,30	22,23	101,60	T	-	CS-08
3/4	25,40	25,60	30,00	101,60	T	-	CS-12
1	38,10	38,40	42,40	101,60	T	-	CS-16

Further dimmensions on request.

For Order Code please combine:
Quality[A] - Product Code[B] + Diameter[C]

COAXIAL TERMINATOR
IMPERIAL

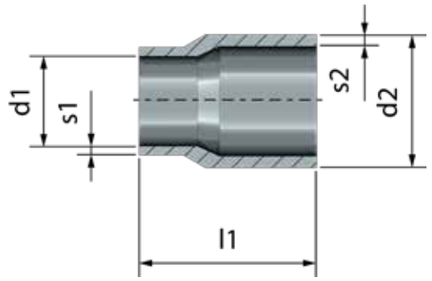

Imperial	Terminator			TCC		Product Code[B] + Diameter[C]
	d1	d2	l1			
Inch		mm				
1/4	6,35	12,70	25,40	T	-	CTM-04
3/8	9,53	15,88	25,40	T	-	CTM-06
1/2	12,70	19,05	25,40	T	-	CTM-08
3/4	19,05	25,40	31,75	T	-	CTM-12
1	25,40	38,10	31,75	T	-	CTM-16

Further dimmensions on request.

For Order Code please combine:
Quality[A] - Product Code[B] + Diameter[C]

COAXIAL PURGE TEE
IMPERIAL

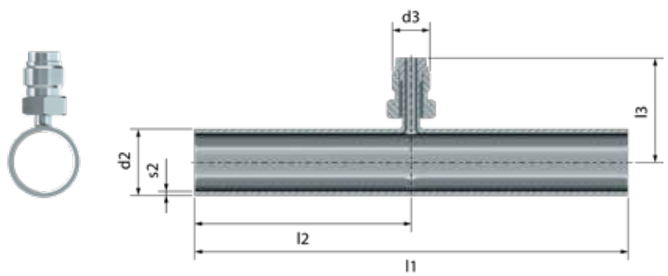

Nominal Size			Length			VCR®	TCC		Product Code[B] + Diameter[C]
d1	d2	s2	l1	l2	l3	d3			
	mm			mm		Inch			
1/4"	12,70	1,24	146,00	73,00	33,30	1/4	T	-	CPT-04
3/8"	15,88	1,24	152,40	76,20	34,80	1/4	T	-	CPT-06
1/2"	19,05	1,65	152,40	76,20	36,40	1/4	T	-	CPT-08
3/4"	25,40	1,65	165,10	82,55	39,60	1/4	T	-	CPT-12
1"	38,10	1,65	165,10	82,55	45,85	1/4	T	-	CPT-16

For Order Code please combine:
Quality[A] - Product Code[B] + Diameter[C]

VCR® is a registered trademark of Swagelok Company, USA

Further dimmensions on request.

COAXIAL BULKHEAD PURGE TEES
IMPERIAL

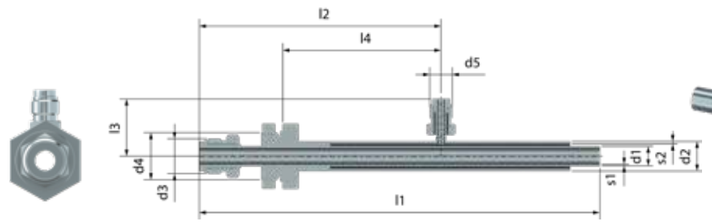

Nominal Size				Length				Main tube	Branch		Straight thread	ultron		Product Code[B] + Diameter[C]
d1	s1	d2	s2	l1	l2	l3	l4	VCR® Size	VCR® Tube Size	VCR® Size	Size			
								d3	d5		d4	316 L		
			mm						Inch		Wall aperture			
1/4	6,35	0,89	12,70	1,24	242,90	144,50	33,15	55,00	1/4	1/4	M20 x 1.5	U	-	CBP-04
3/8	9,53	0,89	15,88	1,24	256,20	154,60	34,80	53,40	1/4	1/4	M30 x 2	U	-	CBP-06
1/2	12,70	1,24	19,05	1,65	256,20	154,60	36,40	53,40	1/4	1/4	M30 x 2	U	-	CBP-08

For Order Code please combine:
Quality[A] - Product Code[B] + Diameter[C]

VCR® is a registered trademark of Swagelok Company, USA

Further dimmensions on request.

Optimized designs, the purest surfaces, perfected welds

When it comes to implementing complex components and systems Dockweiler is your manufacturing specialist. Maximizing productivity is the primary goal. This requires a highly reliable and efficient solution. The focus here is on low dead space and surface optimization.

Bubbler / Container Vessels

Page 54

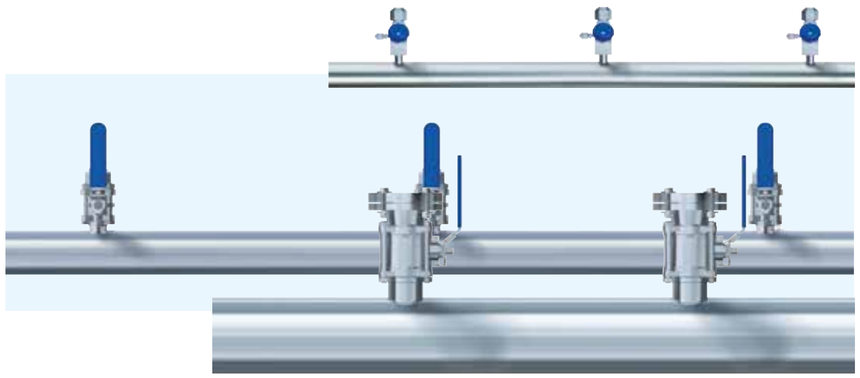

Prefabricated Laterals

Page 56

PROCESS VESSELS (BUBBLER) FOR ORGANOMETALLIC COMPOUNDS

Dockweiler process vessels guarantee safety when feeding ultra-pure media to critical manufacturing steps such as metal organic vapor phase epitaxy (MOVPE). In addition theyoffer a plus in safety due to their absolute tightness (helium leakage rate ≤ 4.0 x10^{-9} mbar l s^{-1}) and robust design.

HPL SERIES

The Dockweiler HPL series stands out from the competition by offering the most efficient utilization of the medium (e.g. trimethylgallium/TMG) .

Electropolishable orbital welding seams, optimal vessel size and shape and the elimination of dead space ensure the highest level of saturation of the carrier gas.

HPS SERIES

With the patented HPS solids bubbler. Dockweiler has developed a completely new bubbler design.

To ensure continuous saturation of the carrier gas with the filling medium, the HPS bubbler has a patented chamber system through which the flow of carrier gas is channeled.

ECO SERIES

The Dockweiler ECO series offers a variant of the HPL bubbler designed for the evaporation of liquids.

Dockweiler has systematically standardized the components used to offer an inexpensive alternative to the HPL bubbler.

OPTIONS

Dockweiler's HPL and HPS series bubblers can be customized with a wide range of options to create the ideal match for your application.

Valves 1
We use Ham-Let 90° monolever rotating diaphragm valves as standard for our bubblers. Valves from the following manufacturers are also optionally available: Swagelok, Carten Controls, Parker and other valves on request.

Crossover Function 2
The crossover function is a purging option with no dead space for eliminating oxygen from the system (including the inlet and outlet valves) during filling on the chemical manufacturer's premises or while the bubbler is connected to a process. It thus offers a simple, efficient solution for cleaning the gas path.

Level Sensor 3
The level sensor is a signal generator that, together with a fill level indicator, reliably displays the residual amount of organometallic compound in the bubbler. Dockweiler offers an ultrasonic sensor for the bubbler, featuring specified switching points (90%, 70%, 30%, 10%) for signaling the fill level.

Polarized Connectors 4
The standard design features male face seal for both connectors. To prevent confusion when connecting. Dockweiler offers male and female connectors.

TECHNICAL DATA

Application Areas HPL and ECO series for Fluids HPS for Solids	**Materials** 1.4404, 1.4435, UNS S31603 (316L), UNS N08367 (AL-6XN), UNS N08904 (904L), UNS N06022
Volumes from 0.053 to 14.794 gal US (200 ml to 56 l)	**Surface Options** • Ra_{avg} ≤ 16 µin and Ra_{avg} ≤ 10 µin for electropolished version • bright finished, anodical cleaned, electropolished

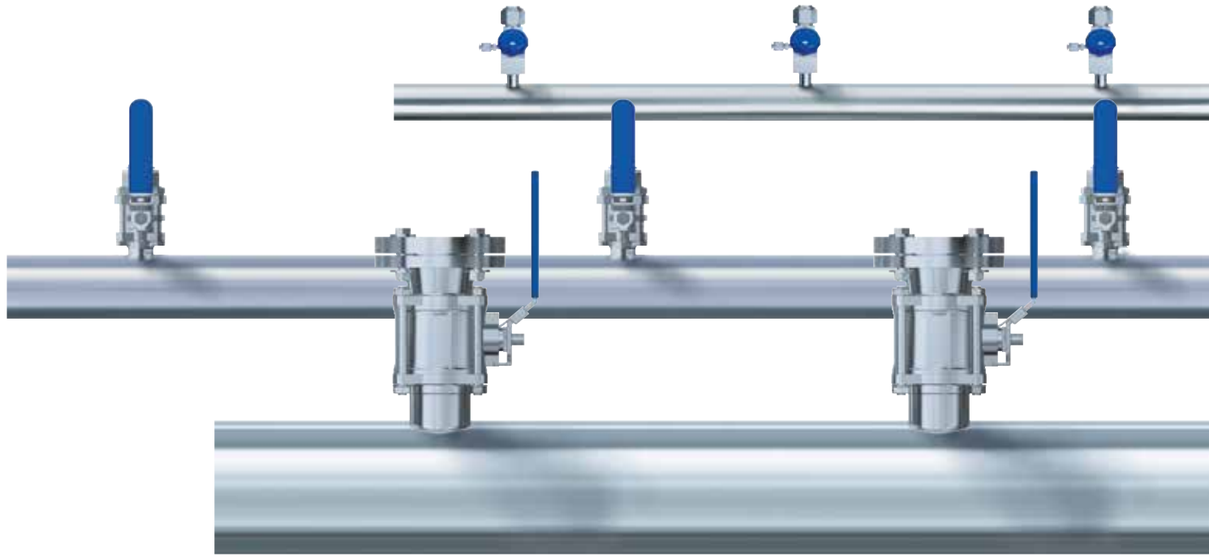

PREFABRICATED LATERALS

Manifolds for utility lines are designed to simplify UHP, CFOS and PCW installations. UHP Manifolds are necked out and then welded, tested and packaged in an ISO 4 / Class 10 cleanroom. The use of prefabricated manifolds reduces the overall installation and acceptance process of the system through faster purge time and reduced particle count.

LATERAL

Standard deliverd length
6 m

Welding
- SEMI F78-0611
- SEMI F81-0611

Tests / Documentation
Leak test: 100 % Helium Leak Tested

Weld Logs
Material Certifications

TUBE

Material
UNS S31603 (316L) / 1.4404 / 1.4435 / 316LTP

Dimmensions
1/2" up to 6" Further dimmensions on request

Inner surface options

- **ultron**: Ra_{max} 10 µin (others on request)
- **TCC**: Ra_{max} 30 µin

VALVES

Type
Ball valves, diaphragma valve or equivalent valves.
Multiple configurations available.

Dimmensions
1/4" up to 1"

Handle color
Blue (standard); color handles are available

ELEMENTS IN STAINLESS STEELS
MATERIALS OVERVIEW

Steel is one of the most commonly used alloys and consists mainly of iron. In general the carbon content is less than 2%. It contains also other components that may emerge due to the manufacturing process or are added to obtain certain characteristics.

Stainless steels according to EN 10020 are alloyed and unalloyed steels with a special purity level like for example steels with a sulphur and phosphorous content (a so-called iron companion) that is not higher than 0.025%.

Stainless steels are characterized by an amount of chromium of more than 10.5%. Due to that high chromium content a protective and dense passive layer of chromium oxide establishes on the material surface. The term “stainless steel” is therefore misleading since materials cannot be stainless in any field of application.

The right choice of the convenient material is crucial for its application. A variety of steels and alloys have been developed to counteract against the possible forms of corrosion in the different industry branches. The requirement for a suitable, corrosionResistant use of a material is still the appropriate manufacturing.

Regarding the application it is important to know and to assess besides the material also the process parameter like medium, concentration, time and temperature.

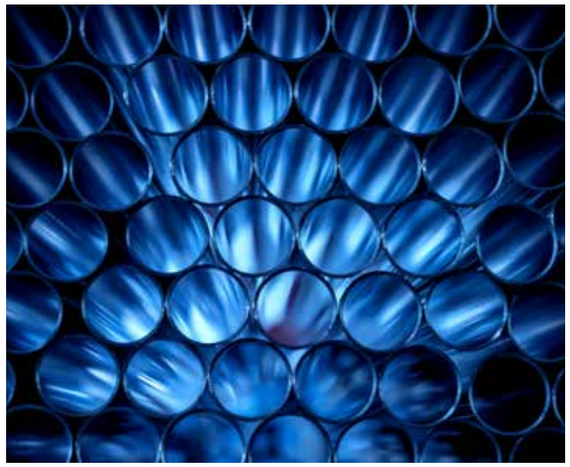

Type	AISI	JIS G 3459	Short name	UNS	C	Mn	P	S	Si	Cr	Ni	Mo	W	V	Co	Ti	Cu	N	PREN
Austenite	304		X5CrNi18-10	S30400	0.08	2	0.045	0.03	1	17.5-19.5	8.0-10.5	–	–	–	–	–	–	–	19
	304L		X2CrNi19-11	S30403	0.03	2	0.045	0.015	1	18.0-20.0	10.0-13.0	–	–	–	–	–	–	–	20
	304L		X2CrNi18-9	S30403	0.03	2	0.045	0.015	1	17.5-19.5	8.0-10.5	–	–	–	–	–	–	–	19
	316L		X2CrNiMo17-12-2	S31603	0.03	2	0.045	0.015	1	16.5-18.5	10.0-14.5	2.00-2.50	–	–	–	–	–	–	23
	316L		X2CrNiMo18-14-3	S31603	0.03	2	0.045	0.015	1	17.0-19.0	12.5-15.0	2.50-3.00	–	–	–	–	–	–	26
		316LTP	X2CrNIMo18-14-3	S31603	0.03	1	0.045	0.010	1	16.0- 18.0	12.0-14.0	2.00- 3.00	–	–	–	0.02	–	–	26
	316Ti		X6CrNiMoTi17-12-2	S31635	0.08	2	0.045	0.015	1	16.5-18.5	10.0-13.5	2.00-2.50	–	–	–	0.5	–	–	23
Super Austenitic	317L		X2CrNiMoN-18-15-4	S31703	0.03	2	0.045	0.03	1	17.5-19.5	13.0-17.0	3.0-4.0	–	–	–	–	–	0.11	29
	904L		X1NiCrMoCu25-20-5	N08904	0.02	2	0.03	0.01	0.7	19.0-21.0	24.0-26.0	4.0-5.0	–	–	–	–	1.2 - 2.0	0.15	36
	6Mo		X2 NiCrMoCuN20-18-6	S31254	0.02	1	0.03	–	1	19.5-20.5	17.5-18.5	6.0-7.0	–	–	–	–	0.50-1.00	0.18-0.25	42
			AL-6XN	N08367	0.03	2	0.03	0.01	0.5	19.0-20.0	24.0-26.0	6.0-7.0	–	–	–	–	–	0.18	42
Duplex									1	21.0-23.0	4.5-6.5	2.50-3.5	–	–	–	–	–	0.10-0.22	31
	F53		X2CrNiMoN 25-7-4	S32750	0.02	2	0.035	0.015	1	25	7	4	–	–	–	–	–	0.27	43
	S31254		254 SMO	S31254	0.01	1	0.03	0.01	1	20	18	6.1	–	–	–	–	–	0.2	42
Nickel based alloy	22		Alloy 22	N06022	0.01	0.5	–	–	0.08	22	56	13	3	0.35	2.5	0	0	0	46
	276		Alloy 276	N10276	0.01	1	0.025	0.01	0.08	14.5	57	15	3	0.35	2.5	0	0	0	45

Pitting Resistance Equivalent Number (PREN)

Steel PREN = %Cr + 3,3 x %Mo + 16 x %N
Nickel based Alloy PREN = %Cr + 1,5 x (%Mo + %W + Nb)
Seawater resistance PREN ≥ 40

* Not all materials available from stock

Dockweiler Asia Co., Ltd.
TRR Tower
238 Naradhiwat Rajanagarindra Road
12th Floor, Chong Nonsi, Yan Nawa
Bangkok 10120 | Thailand

+66-32-709-662
sales.asia@dockweiler.com

www.dockweiler.com

ME APAC / EN 11-2025